DOT/FAA/CT-96/1

FAA Technical Center
Atlantic City International Airport,
NJ 08405

Operational Test and Evaluation (OT&E) Radio Control Equipment (RCE)

Communication/Infrastructure Branch
CNS Engineering and Test Division
FAA Technical Center

January 1996

Final Report

This document is available to the public through
the National Technical Information Service,
Springfield, Virginia 22161

U.S. Department of Transportation
Federal Aviation Administration

NOTICE

This document is disseminated under the sponsorship of the U.S. Department of Transporation in the interest of information exchange. The U.S. Government assumes no liability for the contents or use thereof.

TECHNICAL REPORT STANDARD TITLE PAGE

1. Report No. DOT/FAA/CT-96/1	2. Government Accession No.	3. Recipient's Catalog No.
4. Title and Subtitle Operational Test and Evaluation (OT&E) Final Report: Radio Control Equipment (RCE)		5. Report Date January 1996
		6. Performing Organization Code
7. Author(s) H. Bilicki, R. Lehman, and R. Fesnak		8. Performing Organization Report No.
9. Performing Organization Name and Address Atlantic Science and Technology Inc. 1413 Cantillion Blvd. Mays Landing, NJ 08330		10. Work Unit No. DTFA03-91-C-00009
		11. Contract or Grant No.
12. Sponsoring Agency Name and Address U.S. Department of Transportation Federal Aviation Administration 800 Independence Avenue, S.W. Washington, D.C. 20591		13. Type of Report and Period Covered Final Report
		14. Sponsoring Agency Code AND-330
15. Supplementary Notes		

16. Abstract

This report documents the results of the Operational Test and Evaluation (OT&E) of the Radio Control Equipment (RCE, previously known as the Down Scope Radio Control Equipment, DSRCE). The OT&E consisted of three separate efforts during the time period, December 1994 to September 1995. A segmented OT&E was conducted to accommodate equipment modifications necessary to correct anomalies/problems discovered during testing.

We recommend that the RCE be deployed. This decision is made on the premise that follow up testing will be conducted to address the following concerns; End-to-End System Analysis, Voice Quality, Power Requirements, EMI, Central Maintenance Terminal (CMT), Configuration (Dual Control, Separate Transmitter-Receiver, and Antenna Transfer Relay), and Documentation.

There are several modifications (Planned Product Improvements) planned for the RCE after the completion of the OT&E effort. It is essential that these modifications/improvements be tested and verified in a follow up OT&E effort. These changes include adding VOX functionality, Sustaining-BUEC functionality, MPS, and updates to the CMT software.

17. Key Words RCE OT&E Communications		18. Distribution Statement Document is available to the public through the National Technical Information Service, Springfield, Virginia 22161	
19. Security Classif. (of this report) Unclassified	20. Security Classif. (of this page) Unclassified	21. No. of Pages Rpt - 151 App - 420	22. Price

Form DOT F 1700.7 (8-69)

EXECUTIVE SUMMARY

The Operational Test and Evaluation (OT&E) testing consisted of three separate efforts. The first OT&E effort was from December 6, 1994 to January 5, 1995. The Radio Control Equipment (RCE, previously known as The Down Scoped Radio Control Equipment - DSRCE) was returned to Communication Systems Technology, Inc. (CSTI) from January 6, 1995 to February 6, 1995. During this time modifications were made by CSTI to correct anomalies/problems. The second OT&E effort started February 13, 1995 to May 26, 1995. The third OT&E effort was performed on final production RCE units from August 22, 1995 to September 22, 1995. The Federal Aviation Administration (FAA) Technical Center has conducted a comprehensive OT&E effort on the RCE. After analyzing the results of the tests, we recommend that the RCE be deployed. This decision is made on the premise that follow up testing and/or investigation will be conducted to address the following concerns:

End-to-End System Analysis - An analysis of the complete audio path from the controller to the radio and vice-versa needs to be performed. There are several caveats to the alignment process presently being used which needs to be address and a standardized process for aligning the complete system needs to be identified.

Voice Quality - Test results did not meet the required score of 91.0 ± 0.7. Air Traffic Control (ATC) personnel at the Jacksonville, ARTCC evaluated voice quality and found it acceptable with a 3% degradation from existing equipment.

Power Requirements - The Control RCE power supply failed Inrush Current testing at 240 Volts AC.

EMI - The original RCE failed two tests for Electromagnetic Interference (EMI). Since the RCE has undergone several hardware changes the FAATC has requested (via the PMO) that another independent EMI characterization be performed and forward the results of same to the FAATC for review. The specification requirement was only to provide EMI characterization data for the RCE.

CMT - The Central Maintenance Terminal (CMT) product is not mature and has several outstanding Program Technical Report's (PTRs) against the software.

Configuration - The Dual Control, Separate Transmitter-Receiver, and Antenna Transfer Relay (ATR) configurations were tested at OT&E, but have not undergone Shakedown testing.

Documentation - CMT, Maintenance Data Terminal (MDT), RCE System Manual, Data Voice Card (DVC) and Dual Channel Enclosure (DCE) documentation needs to be updated.

Please refer to the Recommendations section of this document for proposed resolutions to all stated concerns.

There are several modifications (planned product improvements) planned for the RCE after the completion of the OT&E effort. It is essential that these modifications/improvements be tested and verified in a follow-up OT&E effort. The magnitude of the changes include adding VOX functionality, Sustaining-BUEC functionality, MPS, and several updates to the CMT. The modifications are described in the Recommendations section of this document.

5.1.2.1.8 LM01-B/C - Control Signal Levels 5.1-12
5.1.2.1.9 SC01-B/C - Single Channel Operation 5.1-18
5.1.2.1.10 EI01-B/C - VSCE Voice Interface 5.1-18
5.1.2.1.11 EI02-IM - Telephone Line Impedance 5.1-19
5.1.2.1.12 EI02-IS - Telephone Line Isolation 5.1-20
5.1.2.1.13 EI02-VG - VG6 Operation, Interface B/C 5.1-20
5.1.2.1.14 EI03 - RCE/Solid State Remote Radio Equipment Interface . 5.1-21
5.1.2.1.15 CN03 - Single Channel Configuration 5.1-23
5.1.2.1.16 EI02-TL - Telephone Line Transmit Adjust 5.1-24
5.1.2.1.17 EI02-RL - Telephone Line Receive Adjust 5.1-25
5.1.2.2 Manual Tests 5.1-27
5.1.2.2.1 ER01-B - Electrical Requirements 5.1-28
5.1.2.2.2 ER02-B - Functional Signal Inputs 5.1-28
5.1.2.2.3 AC02 - Isolation 5.1-29
5.1.2.2.4 GN01 - AC Grounding 5.1-29
5.1.2.2.5 GN02 - Chassis Grounding 5.1-29
5.1.2.2.6 CF01 - Harmonic Content 5.1-29
5.1.2.2.7 CF02 - Inrush Current Limiting 5.1-31
5.1.2.2.8 CF03 - Control Facility Power Factor 5.1-32
5.1.2.2.9 VH01 - Voice Quality 5.1-34
5.1.2.2.10 EI02-LB - Longitudinal Balance 5.1-37
5.1.2.2.11 IT01 - PTT (M/S) Transfer Inhibit 5.1-38
5.1.2.2.12 LR01 - LRU Removal and Insertion 5.1-38
5.1.2.2.13 MN01 - Front Panel Status Indicators 5.1-38
5.1.2.2.14 MN02 - Front Panel Maintenance Control 5.1-38
5.1.2.2.15 MN03 - Voice Access Jacks 5.1-39
5.1.2.2.16 DR01-C - Dry Relay Contact Parameters 5.1-39
5.1.2.2.17 ER03 - Output Short Circuit 5.1-39
5.1.2.3 Inspections 5.1-41
5.1.2.3.1 AC01 - AC Line Controls 5.1-42
5.1.2.3.2 GN02 - Ground 5.1-42
5.1.2.3.3 MC02 - Interconnection Cable Inspection 5.1-42
5.1.2.3.4 MC03 - Cable Connector Inspection 5.1-43
5.1.2.3.5 MC04 - Protective Covers Inspection 5.1-44
5.1.2.3.6 MN03 - Voice Access Jacks 5.1-45
5.1.2.3.7 EI02-SA - Telephone Line Receive/Transmit Separate Adjust 5.1-45
5.1.2.4 Miscellaneous 5.1-46
5.1.2.4.1 LN01 - Leased Interfacility NAS Communications System (LINCS) 5.1-47
5.1.2.4.2 CN01 - Separate Receiver and Transmitter Site Configuration 5.1-47
5.1.2.4.3 CN02 - Alternate Configurations, Priority/Non-Priority Mode 5.1-50
5.1.2.4.4 SC02 - Transmission Path Loss 5.1-50
5.1.2.4.5 BI01 - Burn-In Testing 5.1-51
5.1.2.5 CT01- Certifications 5.1-52
5.2 Phase 2 - Radio Communication Link 5.2-1

4.5.2 Phase 2 - Radio Communication Link 4.5-26
4.5.2.1 RC01 - Nominal RCL 4.5-26
4.5.2.2 RC02 - Degradation using RCL 4.5-26
4.5.2.3 RC03 - Low Density RCL (LDRCL) 4.5-26
4.5.3 Phase 3 - Radio Transmitter/Receiver Interface 4.5-26
4.5.3.1 RM01 - Motorola Radio Units, PTT Keying 4.5-26
4.5.3.2 RM02 - Motorola Radio units, Audio Tone/Modulation/RF Power 4.5-27
4.5.3.3 RM03 - Motorola Radio Units (CM-200), Power Configurations . 4.5-27
4.5.3.4 RI01- ITT Ground Remote Receiving (AN/GRR) and Ground Remote Transmitter (AN/GRT) Units, PTT Keying 4.5-28
4.5.3.5 RI02 - ITT Ground Remote Receiving (AN/GRR) and Ground Remote Transmitter (AN/GRT) Units, Audio Tone/Modulation/RF Power 4.5-28
4.5.3.6 RI03 - ITT Ground Remote Receiving (AN/GRR) and Ground Remote Transmitter (AN/GRT) Units, Power Configurations 4.5-29
4.5.4 Phase 4 - Voice Switching and Control Equipment 4.5-29
4.5.4.1 VS01 - VSCE 4.5-29
4.5.5 Phase 5a - Integrated Air/Ground Test, FAA Technical Center 4.5-29
4.5.5.1 VS02 - VSCE 4.5-29
4.5.6 Phase 5b - Integrated Air/Ground Test, Jacksonville ARTCC 4.5-29
4.5.6.1 VS03 - Integrated Air/Ground Operational Test 4.5-29
4.5.7 Unscripted/Characterization Tests 4.5-30
4.5.7.1 Small Tower Voice Switch 4.5-30
4.5.7.2 Rapid Deployment Voice Switch 4.5-30
4.5.7.3 End-to-End Frequency Characterization of an RCE Channel (Uplink) 4.5-30
4.5.7.4 Frequency Characterization of the RCE Modem 4.5-30
4.5.7.5 Maintenance Data Terminal (MDT) Compatibility 4.5-31
4.5.7.6 Central Maintenance Terminal (CMT) Compatibility 4.5-31
4.5.7.7 RCE/BUEC Interface Electromagnetic Interface (EMI) 4.5-31
4.5.7.8 Non-Linear Gain of RCE Audio Path 4.5-31
4.6 Data Collection and Analysis 4.6-1

5.0 RESULTS AND DISCUSSION 5.1-1
5.1 Phase 1 - RCE Testbed 5.1-1
5.1.1 Pass/Fail Data Sheets 5.1-1
5.1.2 Summary Descriptions/Results 5.1-1
5.1.2.1 Automated Tests 5.1-2
5.1.2.1.1 TM01-MB - Receiver Mute/Unmute Timing 5.1-3
5.1.2.1.2 LM01-MB - Receiver Mute/Unmute Level 5.1-4
5.1.2.1.3 EI02-DL - VG6 Operation with Delay 5.1-6
5.1.2.1.4 EI02-IN - VG6 Operation with Impulse Noise 5.1-6
5.1.2.1.5 VH02 - Noise 5.1-7
5.1.2.1.6 VH03 - Crosstalk 5.1-8
5.1.2.1.7 TM01-B/C - End-to-End System Timing 5.1-9

4.5.1.1.6 VH03 - Crosstalk 4.5-5
4.5.1.1.7 TM01-B/C - End-to-End System Timing 4.5-6
4.5.1.1.8 LM01-B/C - Control Signal Levels 4.5-7
4.5.1.1.9 SC01 - B/C Single Channel Operation 4.5-8
4.5.1.1.10 EI01-B/C - VSCE Voice Interface 4.5-8
4.5.1.1.11 EI02-IM - Telephone Line Impedance 4.5-9
4.5.1.1.12 EI02-IS - Telephone Line Isolation 4.5-9
4.5.1.1.14 EI03 - RCE/Solid State Remote Radio Equipment Interface . 4.5-10
4.5.1.1.15 CN03 - Single Channel Configuration 4.5-10
4.5.1.1.16 EI02-TL - Telephone Line Transmit Adjust 4.5-11
4.5.1.1.17 EI02-RL - Telephone Line Receive Adjust 4.5-12
4.5.1.2 Manual Tests 4.5-12
4.5.1.2.1 ER01-B - Electrical Requirements 4.5-12
4.5.1.2.2 ER02-B - Functional Signal Inputs 4.5-12
4.5.1.2.3 AC02 - Isolation 4.5-12
4.5.1.2.4 GN01 - AC Grounding 4.5-12
4.5.1.2.5 GN02 - Chassis Grounding 4.5-12
4.5.1.2.6 CF01 - Harmonic Content 4.5-15
4.5.1.2.7 CF02 - Inrush Current Limiting 4.5-15
4.5.1.2.8 CF03 - Control Facility Power Factor 4.5-15
4.5.1.2.9 VH01 - Voice Quality 4.5-15
4.5.1.2.10 EI02-LB - Longitudinal Balance 4.5-15
4.5.1.2.11 IT01 - PTT (M/S) Transfer Inhibit 4.5-16
4.5.1.2.12 LR01 - LRU Removal and Insertion 4.5-16
4.5.1.2.13 MN01 - Front Panel Status Indicators 4.5-16
4.5.1.2.14 MN02 - Front Panel Status Maintenance Controls 4.5-18
4.5.1.2.15 MN03 - Voice Access Jacks 4.5-18
4.5.1.2.16 DR01-C - Dry Relay Contact Parameters 4.5-18
4.5.1.2.17 ER03 - Output Short Circuit 4.5-18
4.5.1.3 Inspections 4.5-20
4.5.1.3.1 AC01 - AC Line Controls 4.5-20
4.5.1.3.2 GN02 - Ground 4.5-20
4.5.1.3.3 MC02 - Interconnection Cable Inspection 4.5-20
4.5.1.3.4 MC03 - Cable Connector Inspection 4.5-20
4.5.1.3.5 MC04 - Protective Covers Inspection 4.5-21
4.5.1.3.6 MN03 - Voice Access Jacks 4.5-21
4.5.1.3.7 EI02-SA - Telephone Line Receive/Transmit Separate Adjust 4.5-21
4.5.1.4 Miscellaneous Tests 4.5-21
4.5.1.4.1 LN01 - Leased Interfacility NAS Communications System (LINCS) 4.5-21
4.5.1.4.2 CN01 - Separate Receiver and Transmitter Site Configuration 4.5-22
4.5.1.4.3 CN02 - Alternate Configurations, Priority/Non-Priority Mode 4.5-24
4.5.1.4.4 SC02 - Transmission Path Loss 4.5-24
4.5.1.4.5 BI01 - Burn-In Testing 4.5-25
4.5.1.5 CT01 - Certifications 4.5-25

TABLE OF CONTENTS

1.0 INTRODUCTION 1.1-1
1.1 Purpose 1.1-1
1.2 Scope 1.1-1

2.0 DOCUMENTS 2.1-1
2.1 Federal Aviation Administration (FAA) Specifications 2.1-1
2.1.1 Federal Aviation Administration Standards 2.1-1
2.1.2 Federal Aviation Administration Orders 2.1-2
2.2 Other Publications 2.1-2

3.0 SYSTEM DESCRIPTION 3.1-1
3.1 Mission Review 3.1-1
3.2 Test System Configurations 3.1-1
3.2.1 OT&E Efforts 3.1-1
3.2.2 Test Configurations 3.1-1
3.2.3 Interface Configurations 3.1-2
3.2.4 Software/Hardware Revisions 3.1-2
3.2.4.1 Software Revisions 3.1-2
3.2.4.2 Hardware Revisions 3.1-2
3.2.5 Telco Level Settings 3.1-3
3.2.6 Automated Testbed Default Values 3.1-3
3.2.7 PTT Options 3.1-4
3.2.8 Two Port/Eight Port Audio Configuration 3.1-5
3.2.9 Dual Control Configuration 3.1-5
3.2.10 Separate Transmitter/Receiver Configuration 3.1-5
3.2.11 Maintenance Data Terminal Software 3.1-5
3.2.12 Central Maintenance Terminal 3.1-6
3.3 Interfaces Overview 3.1-6

4.0 TEST AND EVALUATION DESCRIPTION 4.1-1
4.1 Test Schedule and Locations 4.1-1
4.2 Test Participants 4.2-1
4.3 Test and Specialized Equipment 4.3-1
4.4 Test Objectives/Criteria 4.4-1
4.5 Test Descriptions 4.5-1
4.5.1 Phase 1 - RCE Testbed 4.5-1
4.5.1.1 Automated Tests 4.5-1
4.5.1.1.1 TM01-MB - Receiver Mute/Unmute Timing 4.5-1
4.5.1.1.2 LM01-MB - Receiver Mute/Unmute Level 4.5-3
4.5.1.1.3 EI02-DL - VG6 Operation with Delay 4.5-3
4.5.1.1.4 EI02-IN - VG6 Operation with Impulse Noise 4.5-3
4.5.1.1.5 VH02 - Noise 4.5-4

5.2.1 Pass/Fail Data Sheet 5.2-1
5.2.2 Summary Descriptions 5.2-2
5.2.2.1 RC01 - Nominal RCL 5.2-2
5.2.2.2 RC02 - Degradation using RCL 5.2-2
5.2.2.3 RC03 - Low Density RCL (LDRCL) 5.2-2
5.3 Phase 3 - Radio Transmitter/Receiver Interface 5.3-1
5.3.1 Pass/Fail Data Sheet 5.3-1
5.3.2 Summary Descriptions 5.3-2
5.3.2.1 RM01 - Motorola Radio Units - PTT Keying 5.3-2
5.3.2.2 RM02 - Motorola Radio Units, Audio Tone/Modulation/RF Power . 5.3-2
5.3.2.3 RM03 - Motorola Radio Units - Power Configurations 5.3-2
5.3.2.4 RI01 - ITT Ground Remote Receiving (AN/GRR) and Ground Remote Transmitter (AN/GRT) Units - PTT Keying 5.3-2
5.3.2.5 RI02 - ITT Ground Remote Receiving (AN/GRR) and Ground Remote Transmitter (AN/GRT) Units - Audio Tone/Modulation/RF Power 5.3-2
5.3.2.6 RI03 - ITT Ground Remote Receiving (AN/GRR) and Ground Remote Transmitter (AN/GRT) Units - Power Configurations 5.3-3
5.4 Phase 4 - Voice Switching and Control Equipment 5.4-1
5.4.1 Pass/Fail Data Sheets 5.4-1
5.4.2 Summary Descriptions 5.4-1
5.4.2.1 VS01 - VSCE 5.4-1
5.5 Phase 5a - Voice Switching and Control Equipment 5.5-1
5.5.1 Pass/Fail Data Sheets 5.5-1
5.5.2 Summary Descriptions 5.5-1
5.5.2.1 VS02 - VSCE 5.5-1
5.6 Phase 5b - Integrated A/G Test 5.6-1
5.6.1 Pass/Fail Data Sheets 5.6-1
5.6.2 Summary Descriptions 5.6-1
5.6.2.1 VS03 - Integrated A/G Operational Test 5.6-1
5.7 Unscripted/Characterization Tests 5.7-1
5.7.1 Pass/Fail Data Sheets 5.7-1
5.7.2 Summary Descriptions 5.7-2
5.7.2.1 Small Tower Voice Switch (STVS) 5.7-2
5.7.2.2 Rapid Deployment Voice Switch (RDVS) 5.7-2
5.7.2.3 End-to-End Frequency Characterization of an RCE Channel (Uplink) 5.7-2
5.7.2.4 Frequency Characterization of the RCE Modem 5.7-2
5.7.2.5 MDT Compatibility 5.7-7
5.7.2.6 CMT Compatibility 5.7-8
5.7.2.7 RCE/BUEC Interface EMI 5.7-10
5.7.2.8 Non-Linear Gain of RCE Audio Path 5.7-10

6.0 Program Technical Report (PTR) List 6.1-1

7.0 RECOMMENDATIONS 7.1-1
7.1 System Analysis 7.1-1
7.2 LINCS 7.1-2
7.3 Voice Quality 7.1-2
7.4 Power Requirements 7.1-2
7.5 EMI 7.1-2
7.6 CMT 7.1-3
7.7 MDT 7.1-3
7.8 Configuration 7.1-3
7.9 Documentation 7.1-4
7.10 Mute Timing 7.1-4
7.11 RCE Modem Data 7.1-4
7.12 VOX Firmware 7.1-4
7.13 Non-Linear Gain of RCE Audio Path 7.1-4
7.14 Software and Hardware Modifications 7.1-4
7.14.1 ZJX Software Modifications 7.1-5
7.14.2 OT&E Software Modifications 7.1-5
7.14.3 Hardware Changes 7.1-5

8.0 OTHER NOTES 8.1-1

9.0 ACRONYM LIST 9.1-1

APPENDICES

A - TIMING DATA PLOTS A-1
B - TIMING AND LEVEL DATA B-1
C - PROGRAM TECHNICAL REPORTS C-1

LIST OF FIGURES

Figure 3-1 DSRCE OT&E Laboratory Configuration 3.1-7
Figure 4-1 DSRCE OT&E Test Schedule 4.1-2
Figure 4-2 DSRCE Testbed Layout - Front View 4.3-3
Figure 4-3 DSRCE Laboratory Simplified Block Diagram 4.5-2
Figure 4-4 Test Connections, Type B Electrical Requirements - ER01-B 4.5-13
Figure 4-5 Test Connections, Type B Functional Signal Inputs - ER02-B 4.5-14
Figure 4-6 Test Connections, Longitudinal Balance - EI02-LB 4.5-17
Figure 4-7 Test Connections, Type C Dry Relay Contact Parameters - DR01-C 4.5-19
Figure 4-8 LINCS Testing 4.5-23
Figure 5-1 LINCS Envelope Delay Distortion 5.1-48
Figure 5-2 End-to-End Frequency Characteristics (+1 dBm) 5.7-3
Figure 5-3 End-to-End Frequency Characteristics (-5 dBm) 5.7-4
Figure 5-4 End-to-End Frequency Characteristics (-11 dBm) 5.7-5
Figure 5-5 Frequency Characteristics of RCE Modem 5.7-6

1.0 INTRODUCTION

1.1 Purpose

The purpose of the Radio Control Equipment (RCE) Operational Test and Evaluation (OT&E) Final Report is to provide a detailed synopsis of the OT&E testing and integration activities, results, summaries, significant conclusions, and recommendations. A summary of the activities conducted during the RCE OT&E Operational and Integration testing and whether the equipment is ready for deployment are provided. This report supplements the Down Scope RCE (DSRCE) Quick Look Report dated May 26, 1995 with supporting data and analyses. The name of the equipment was formally changed from DSRCE to RCE, any references to DSRCE or RCE in this document indicate the same equipment.

1.2 Scope

The Final Report covers the following; the different phases of the OT&E Operational and Integration testing, the Automated Testbed and its components, and the various system configurations tested. The report provides descriptions and results for each of the different tests that are part of the overall OT&E testing. Also included are the data and results from testing performed on production RCE units delivered after the release of the Quick Look Report. The Third OT&E effort testing was necessary to determine if problems uncovered during Shakedown testing were resolved and to test the RCE's Revision D software and hardware modifications.

Sections 1.0 and 2.0 of this report consist of the introduction and referenced documentation, respectively. Descriptions of the RCE system, the various RCE configurations tested, the interfaces with various types of Voice Switching and Control Equipment (VSCE), the Transmitter/Receiver interfaces, and the parameter settings used during testing are provided in Section 3.0. The test schedule, locations, participants, the test equipment, and complete test descriptions are contained in Section 4.0. Test results and data are described in Section 5.0. A list of the Program Technical Reports (PTRs) generated during OT&E testing are in Section 6.0. Recommendations and open issues are detailed in Section 7.0. Section 8.0, Other Notes, encompasses items that were not identified in other sections of the document, but were determined important enough to be included in the report. Also, any configurations of the RCE that were not fully tested are described in Section 8.0. Appendix A contains charts of timing data. Appendix B contains tables of timing and level data. Appendix C contains copies of all the PTRs generated during OT&E. Appendix D is a listing of all the acronyms used in this document.

The OT&E test efforts ensured that the RCE could be successfully integrated in the National Airspace System (NAS) and the equipment performs the operationally required functions as defined in the DSRCE Specification, FAA-E-2885; NAS-SS-1000 Volumes I, IV, and V; NAS-MD-790; NAS-MD-793; and the system level requirements determined by NAS System Engineering Service, ASE-230.

2.0 DOCUMENTS

2.1 Federal Aviation Administration (FAA) Specifications

a. FAA-E-2885 - U.S. Department of Transportation, Federal Aviation Administration Specification SCN-1, CCD 16241, Radio Control Equipment Specification, December 15, 1993.

b. NAS-SS-1000 - National Airspace System (NAS) System Specification, Volume I, March 1992.

c. NAS-SS-1000 - National Airspace System (NAS) System Specification, Volume IV, August 1991.

d. NAS-SS-1000 - National Airspace System (NAS) System Specification, Volume V, February 1993.

e. NAS-MD-790 - National Airspace System (NAS) System Specification, June 10, 1986.

f. NAS-MD-793 - National Airspace System (NAS) System Specification, February 28, 1986.

g. FAA-G-2100E/F - General Requirements, Electronic Equipment Specification, December 6, 1993.

2.1.1 Federal Aviation Administration Standards

a. FAA-STD-020A - Grounding, Transient Protection, and Shielding Requirements for Equipment.

b. FAA-STD-024A - Content and Format Requirements for the Preparation of Test and Evaluation Documents, December 15, 1993.

c. ANSI/IEEE Standard 455-1985 - IEEE Standard Test Procedure for Measuring Longitudinal Balance of Telephone Equipment Operating in the Voice Band.

d. ANSI/IEEE Standard 743-1984 - IEEE Standard Methods and Equipment for Measuring the Transmission Characteristics of Analog Voice Frequency Circuits.

e. MIL-STD-461C/D - Electromagnetic Emission and Susceptibility Requirements for the Control of Electromagnetic Interference, January 11, 1993.

f. MIL-STD-462D - Measurement of Electromagnetic Characteristics, January 11, 1993.

2.1.2 Federal Aviation Administration Orders

a. FAA Order 1810.4B - Federal Aviation Administration (FAA) National Airspace System (NAS) Test and Evaluation Policy, October 22, 1992.

b. FAA Order 6000.30B - Policy for Maintenance of the National Airspace System (NAS) Through the Year 2000, October 8, 1991.

c. FAA Order 6600.22 - Maintenance of Two Point Private Lines, December 1991.

d. FAA Order 6650.4D - Maintenance of Voice Frequency Signaling System, June 16, 1994.

2.2 Other Publications

a. DTFA01-93-R-16456 - Request for Proposal, for Radio Control Equipment, August 31, 1993.

b. CS-2330/CMS - Centralized Maintenance System (CMS) Model CS-2330/CMS User's Guide Revision 1.2, November 21, 1994.

c. CS-2330/RCE - Radio Control Equipment (RCE) Model CS-2330/RCE System Manual Revision 1.2, November 6, 1994.

d. CS-2330/MDT - Maintenance Data Terminal (MDT) Model CS-2330/MDT User's Guide Revision 1.2, November 7, 1994.

e. CS-2330/DVC - Data Voice Card Model CS-2330/DVC Technical Manual Revision 1.3, February 24, 1995.

f. CS-2330/DCE - Dual Channel Enclosure Model CS-2330/DCE Technical Manual Revision 1.3, February 28, 1995.

g. First Unit Acceptance Test (FUAT) Test Procedures, November 13, 1994.

h. ASE-230 - Revalidation RCE Requirements Memorandum, March 10, 1994.

i. TR-TSY-000335 - Bell Systems Central Services Organization - Voice Grade Special Access Service Transmission Parameter Limits and Interface Combinations Issue 2, May, 1990.

j. Analysis and Inspection Comments/Concerns, November 14 - 17, 1994.

k. Original Equipment Manufacturers (OEMs) of the Personal Computers (PC) and Monitors used for the Communications Server and Central Maintenance Terminal.

l. Digiboard Original Equipment Manufacturers (OEMs) XEM System, 1992.

m. RCE-MTP-2 - U.S. Department of Transportation, Federal Aviation Administration Master Test Plan for the Down Scope Radio Control Equipment (RCE), May 27, 1993.

n. RCE Operational Test and Evaluation (OT&E) Test Procedures, December 1, 1994.

3.0 SYSTEM DESCRIPTION

3.1 Mission Review

The Radio Control Equipment (RCE) program is designed to replace existing voice signalling and tone control equipment. The RCE will provide a link for Air to Ground (A/G) communication between Air Route Traffic Control Centers/Area Control Facilities (ARTCC/ACF), Air Traffic Control Towers (ATCT), Automated Flight Service Stations (AFSS), Terminal Radar Approach Control (TRACON) operations, and Remote Communication Facilities (RCF). The RCE will provide the communication voice path, as well as the remote radio control functions, necessary for the air traffic controller to communicate with airborne aircraft.

3.2 Test System Configurations

The RCE is a set of integrated voice/data communications units that, in conjunction with other equipment, will enable air traffic controllers and flight service specialists to communicate with pilots over A/G radios. The RCE will be located in Control facilities and in Remote sites. The Control facility RCE will interface with Voice Switching and Control Equipment (VSCE) while the Remote site RCE will interface with solid state A/G radio transmitters and receivers. The Control and Remote site RCE equipment will be connected via existing dedicated Voice Grade 6 (VG6) transmission paths and in new installations via dedicated Voice Grade 8 (VG8) transmission paths.

3.2.1 OT&E Efforts

The OT&E testing occurred during three main efforts. The First OT&E effort took place from December 6, 1994 to January 5, 1995. The RCE equipment was returned to Communication Systems Technology, Inc (CSTI) on January 6, 1995. During this time modifications were made to correct anomalies/problems uncovered during the First OT&E effort. The Second OT&E effort started February 13, 1996 and finished a week after completion of Shakedown testing on May 26, 1995. The Third OT&E effort was performed on final production RCE units from August 22, 1995 to September 29, 1995.

3.2.2 Test Configurations

During the First OT&E effort, CSTI's operating parameters were set via the Maintenance Data Terminal (MDT) to the Configuration #1 values listed in Section 3.2.5, Telco Level Settings The Configuration #1 parameter values were based on FAA-E-2885. The RCE equipment was returned to CSTI on January 6, 1995. During this time modifications were made to correct anomalies/problems uncovered during the First OT&E effort. The equipment was re-tested in accordance with Configurations #2 and #3 values listed in Section 3.2.5.

Configuration #2 and #3 Telco levels were provided by the FAA Program Management with Operational Support (AOS) concurrence to reflect real world operational scenarios, they were

delivered to the FAA Technical Center on February 15, 1995 and used during the Second OT&E effort. Configuration #2 and #3 non-Telco level parameters were provided by CSTI to ensure the best possible voice quality conditions. These non-Telco level parameters were based on the Telco level settings provided by AOS.

The Third OT&E effort testing was performed with Configuration #4 values listed in Section 3.2.5. This effort consisted of testing final production RCE units with the Telco level set at -8 dBm and the factory default settings. Configurations #1, #2, #3, and #4 are also referred to as the -13 dBm, -8 dBm, 0 dBm, and -8 dBm/Default settings respectively.

3.2.3 Interface Configurations

The RCE equipment supports two types of VSCE interfaces. The Type B interface is a 12.0 VDC/Open configuration. The Type C interface is a dry relay contact closure configuration. The requirements for the Type B interface are explained in Appendix A, Section 10.2.5 of FAA-E-2885 while the requirements for the Type C Interface are explained in Appendix A, Section 10.2.6 of FAA-E-2885. Both interfaces were tested extensively during the OT&E efforts.

3.2.4 Software/Hardware Revisions

The RCE units provided by CSTI went through a series of both software and hardware revisions during the OT&E effort.

3.2.4.1 Software Revisions

Software Revision A, Version 1.0 was used during the First Unit Acceptance Testing (FUAT). FUAT occurred during the week of November 11, 1994 at the CSTI facility in Columbia, Maryland. Some features of the CSTI design were not complete at the time. CSTI issued Software Revision B, Version 1.0, which included these various enhancements and delivered it with the units to be tested to the FAA Technical Center on December 5, 1994. This version of the software was utilized during the First OT&E effort. The RCE equipment was returned to CSTI from January 6, 1995 to February 13, 1995 for correction of anomalies/problems that arose during testing. CSTI issued Software Revision C, Version 1.0, which included changes to correct some of these deficiencies on February 13, 1995. This version of the software was utilized during the Second OT&E effort. After completion of Shakedown testing, Software Revision D, Version 1.0 was released to address problems encountered during the Second OT&E effort and Shakedown testing. This version was delivered with the final production units and was used for the Third OT&E effort.

3.2.4.2 Hardware Revisions

Hardware Revision A was used during FUAT, at CSTI in Columbia, Maryland. Hardware Revision B was used during the First OT&E effort from December 6, 1994 to January 5, 1995. Hardware Revision C was used during the Second OT&E effort. Hardware

Revision D was used during Third OT&E effort testing. This revision included a new Control RCE power supply to better comply with the requirements. Also, the ATR Driver requirements were changed on the Remote DVC from + 24 VDC output to ground when asserted.

3.2.5 Telco Level Settings

The CSTI RCE design requires that channel parameters be configured via the Maintenance Data Terminal (MDT) or the Central Maintenance Terminal (CMT) for various operational scenarios. This gives the equipment the capability to meet the analog voice parameter requirements for the Telco (**shalls**$_{106\text{-}108}$), VSCE/Type B (**shalls**$_{205\text{-}206}$), and VSCE/Type C (**shalls**$_{231\text{-}232}$) interfaces. The Voice Operated Switch (VOX) together with the decay and attack settings are utilized to meet the analog voice quality (**shall**$_{82}$) and noise (**shall**$_{83}$) requirements for various site installations. The automated tests were executed with the RCE operational parameters configured as listed in the following table:

PARAMETER	Config. #1	Config. #2	Config. #3	Config. #4
Telco Level	-13 dBm	-8 dBm	0 dBm	-8 dBm
VOX	-30 dBm	-43 dBm	-40 dBm	-40 dBm*
Modem Level	-28 dBm	-23 dBm	-15 dBm	-23 dBm
Attack Value	10 msec	0 msec	10 msec	10 msec*
Decay Value	100 msec	500 msec	100 msec	100 msec*
VSCE To C-DVC	-5 dBm	-5 dBm	-5 dBm	-5 dBm
R-DVC to Transmitter	-10 dBm	-10 dBm	-10 dBm	-10 dBm
Receiver To R-DVC	0 dBm	0 dBm	0 dBm	0 dBm
C-DVC To VSCE	-17 dBm	-17 dBm	-17 dBm	-17 dBm
Auto mute	Disabled	Disabled	Disabled	Disabled*

* Factory Default settings

3.2.6 Automated Testbed Default Values

The Automated Testbed provides the capability of repeating any test selected by the operator. The operator selects the number of times to repeat a test by inputting a value or using the test's default value. These default values are listed in the following table:

Test Description	Default Value
VH02 - Noise	1
VH03 - Crosstalk	1
TM01-B/C - End-to-End System Timing	250
TM01-MB - Receiver Mute/Unmute Timing (B only)	250
LM01-B/C - Control Signal Levels	10
LM01-MB - Receiver Mute/Unmute Level (B only)	10
EI01-B/C - VSCE Voice Interface	1
EI02-TL - Telephone Line Transmit Adjust	1
EI02-RL - Telephone Line Receive Adjust	1
EI02-IM - Telephone Line Impedance	1
EI02-IS - Telephone Line Isolation	1
EI03 - RCE/Solid State Remote Radio Equipment Interface	1
EI02-VG - VG6 Operation	1
EI02-DL - VG6 Operation with Delay	1
EI02-IN - VG6 Operation with Impulse Noise	1
SC01 - B/C Single Channel Operation	1
CN03 - Single Channel	5
TELCO_XX - Audio	1

3.2.7 PTT Options

The vendor is required to provide two Push-to-Talk (PTT) configurations. The first PTT configuration (PTT Option 1) of the Control RCE accepts two independent PTT signals at the RCE/VSCE interface, which corresponds to the two frequencies of an RCE channel. The Remote RCE PTT key to the Main/Standby transmitters is determined by the Main/Standby select function at the Control DVC. This meets the FAA-E-2885 requirement for **shall**$_{22}$. The second PTT configuration (PTT Option 2, Quad PTT) of Control RCE accepts four independent PTT signals at the RCE/VSCE interface, which corresponds to the two frequencies of an RCE Channel together with separate PTT keys for the Main/Standby transmitters. This meets the FAA-E-2885 requirement for **should**$_{30}$. The following list provides a synopsis of the PTT options:

PTT OPTION 1	PTT OPTION 2
PTT/PTT Release for F1	PTT/PTT Release for Main TX F1
PTT/PTT Release for F2	PTT/PTT Release for Standby TX F1
Main/Standby TX Select for F1	PTT/PTT Release for Main TX F2
Main/Standby TX Select for F2	PTT/PTT Release for Standby TX F2

CSTI provides the capability to configure the RCE channel for either of these two configurations via Input/Output (I/O) Mapping within the MDT or CMT.

3.2.8 Two Port/Eight Port Audio Configuration

The vendor is required to provide two audio port configurations. The first configuration (Option 1, Two Port), of the Control RCE accepts at the RCE/VSCE interface, one audio input per channel for transmission and one audio output per channel for reception of voice data. This meets FAA-E-2885 requirements for **shall**$_{15}$ and **shall**$_{7}$. The second configuration (Option 2, Eight Port) of the Control RCE accepts at the RCE/VSCE interface, four separate audio inputs per channel for transmission and four separate audio outputs per channel for reception of voice data. This meets FAA-E-2885 requirements for **should**$_{3}$ and **should**$_{4}$. The following list provides a synopsis of the Audio Port Configurations:

	Option 1	Option 2	
	2 Ports (C-DVC)/8 Ports (R-DVC)	8 Ports (C-DVC)/8 Ports (R-DVC)	
TX	Main TX F1	Main TX F1	Main TX F1
	Stby TX F1	Stby TX F1	Stby TX F1
	Main TX F2	Main TX F2	Main TX F2
	Stby TX F2	Stby TX F2	Stby TX F2
RX	Main RX F1	Main RX F1	Main RX F1
	Stby RX F1	Stby RX F1	Stby RX F1
	Main RX F2	Main RX F2	Main RX F2
	Stby RX F2	Stby RX F2	Stby RX F2

3.2.9 Dual Control Configuration

The RCE Channel is required to meet Radio Control requirements as outlined in FAA-E-2885 for **shalls**$_{34\text{-}48}$ and **should**$_{5}$ for a Dual Control configuration. This configuration consists of two Control RCEs operating a channel with one Remote RCE over two separate four wire transmission paths. The RCE channel therefore consists of two Control units and one Remote unit. This channel can be operated in both Priority and Non-Priority modes.

3.2.10 Separate Transmitter/Receiver Configuration

The RCE Channel is required to meet the Separate Transmitter/Receiver requirement as outlined in FAA-E-2885 (**shall**$_{12}$). This configuration occurs when a Control facility operates a channel using transmitters and receivers located at separate sites and linked to the Control facility via separate Government provided transmission paths. The RCE channel therefore consists of one Control unit and two Remote units operating over two separate four wire transmission paths.

3.2.11 Maintenance Data Terminal Software

CSTI's design of the RCE is complemented by an automated system used for monitoring and controlling the channel. The MDT provides the means to configure and monitor an RCE channel as required by **shall**$_{75\text{-}76}$ and **should**$_{13}$ of FAA-E-2885. CSTI provided the MDT software package which can be run on a 286 or better IBM compatible personal computer.

Communications between the PC and the RCE are via an IBM/AT Style RS-232C interface DB9 connector on the Front or Rear panel of the RCE. Continuous monitoring of the RCE channel can be done via the MDT Query feature. The MDT provides the capability to monitor and configure the Operating Modes, VOX, DC Power, I/O Maps, serial ports, and the Audio Gains. The MDT also provides maintenance features which can be used in troubleshooting a channel. The Program Office provided 486 based Laptop PCs preloaded with the MDT software.

3.2.12 Central Maintenance Terminal

The CMT is part of the Centralized Maintenance System (CMS) and is required by **shall**$_{74}$ and **should**$_{12}$ of FAA-E-2885. The CMS is located at the Control site and provides workstation monitoring together with the same capabilities of the MDT for multiple RCE channels. The CMS includes the CMT, which provides the primary user interface, and one or more Communication Servers. The hardware is a 486 or better PC and the user interface consists of a Windows based application program.

3.3 Interfaces Overview

During OT&E testing at the FAA Technical Center, the Control RCE was interfaced with the following VSCE types; Voice Switching Control System (VSCS), Integrated Communication Switching System (ICSS-1A), and Western Electric Company (WECO, 4 Channel). VSCS provides a voice communication system which performs the intercom, interphone, and A/G voice connectivity and control functions needed for air traffic control operations in ARTCCs and ACFs. ICSS-1A is a voice switching communication system for TRACONs, ATCTs, and AFSSs. WECO is the current fielded voice communication system used at the enroute consoles. WECO will eventually be replaced by VSCS.

The Remote RCE was interfaced with International Telephone and Telegraph (ITT) Ground Remote Receiver (AN/GRR) and ITT Ground Remote Transmitter (AN/GRT) units and Motorola CM-200 radio transmitters and receivers at the FAA Technical Center RCF. In addition, the Control and Remote RCE units were interfaced with the Radio Communication Link (RCL), Low Density Radio Communication Link (LDRCL), and Routing Circuits Restoral (RCR). RCL, LDRCL, and RCR provide a microwave communication link between the RCE Control and Remote facilities. Telephone line transmission paths between the Control and Remote units were also tested using simulated VG6 and operational VG6 LINCS telephone circuits.

During OT&E, Operational and Integration testing at the Jacksonville ARTCC, the RCE was interfaced with WECO, 4 Channel VSCE and a VG6 MCI Leased Interfacility NAS Communications System (LINCS) telephone circuit. At the Jacksonville RCAG, the RCE was interfaced with ITT Receivers (RX) and Transmitters (TX).

Figure 3-1 depicts the laboratory configurations of the RCE and several operational interfaces that were utilized during OT&E's Operational and Integration testing.

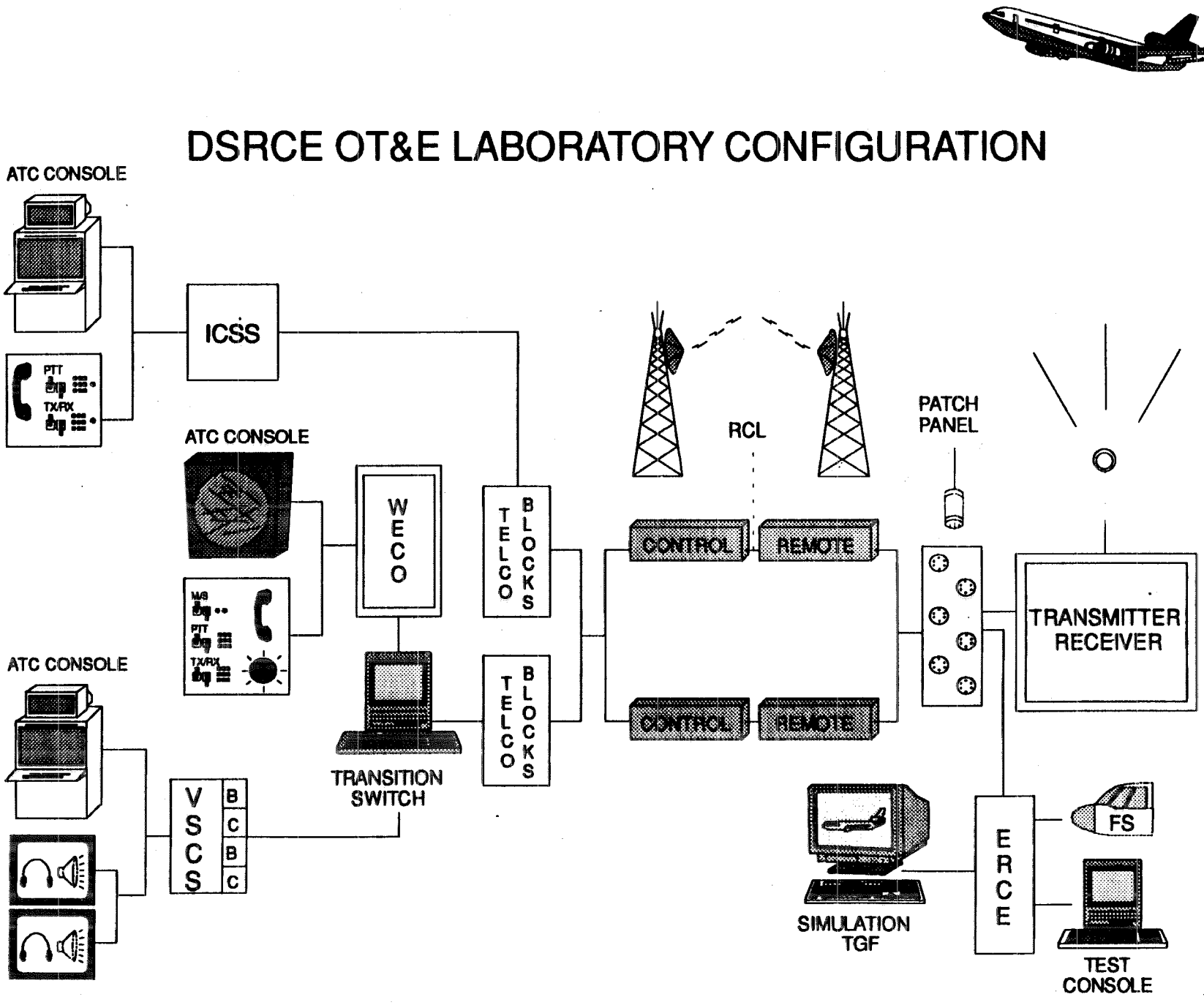

Figure 3–1 DSRCE OT&E Laboratory Configuration

4.0 TEST AND EVALUATION DESCRIPTION

The OT&E test efforts ensured that the RCE could be successfully integrated into the National Airspace System (NAS) and that the equipment performed the required operational functions. The specific requirements are defined in the RCE Specification, FAA-E-2885, SCN-1, and the NAS System Specification, Functional and Performance Requirements, NAS-SS-1000 Volume I, Volume IV, and Volume V. Additional requirements are defined in Remote Maintenance Monitoring System Interface Control Document, NAS-MD-790, and NAS-MD-793. The system level requirements determined by NAS System Engineering Service, ASE-230, per the Revalidation of RCE Requirements Memorandum dated March 10, 1994 from ASE-230 to ANC-300, were also verified during RCE OT&E.

4.1 Test Schedule and Locations

The RCE OT&E was a two-part effort consisting of Operational and Integration testing and Shakedown testing. Operational and Integration testing was conducted at the FAA Technical Center and at the Jacksonville ARTCC (ZJX) in Hilliard, FL. Shakedown testing was conducted by AOS-240 at the Jacksonville ARTCC and a Remote Center A/G (RCAG) communications facility.

Figure 4-1 depicts the RCE OT&E test schedule. Phases 1 through 5a were conducted at the FAA Technical Center. Phase 5b was conducted at the Jacksonville ARTCC/RCAG.

DSRCE OT&E TASK SCHEDULE

ID	Name	Start	Finish
1	DSRCE OT&E ENGINEERING EFFORT	12/6	2/16
2	FAATC DSRCE 1ST OT&E	12/6	2/15
3	PHASE 1	12/6	1/5
9	PHASE 2	12/12	12/16
10	PHASE 3	12/19	12/22
11	CHRISTMAS HOLIDAY	12/24	1/2
12	EQUIPMENT RETURNED TO CSTI	1/6	2/15
13	QUICK-LOOK DATA REPORT - ITERIM	1/11	1/11
14	FAATC DSRCE 2ND OT&E EFFORT	2/21	5/26
15	PHASE 1	2/21	3/10
16	PHASE 2	3/1	3/3
17	PHASE 4	3/20	3/31
18	VOICE QUALITY TESTS	3/31	4/4
19	PHASE 5A	4/13	4/27
20	LINCS	4/28	5/15
21	PHASE 5B (JAX)	5/15	5/19
22	QUICK-LOOK REPORT - FINAL	5/19	5/26
23	DATA ANALYSIS	5/29	8/21
24	FAATC DSRCE 3RD OT&E EFFORT	8/22	1/30
25	VOICE QUALITY TESTS	8/22	8/22
26	PHASE 1	8/22	9/12

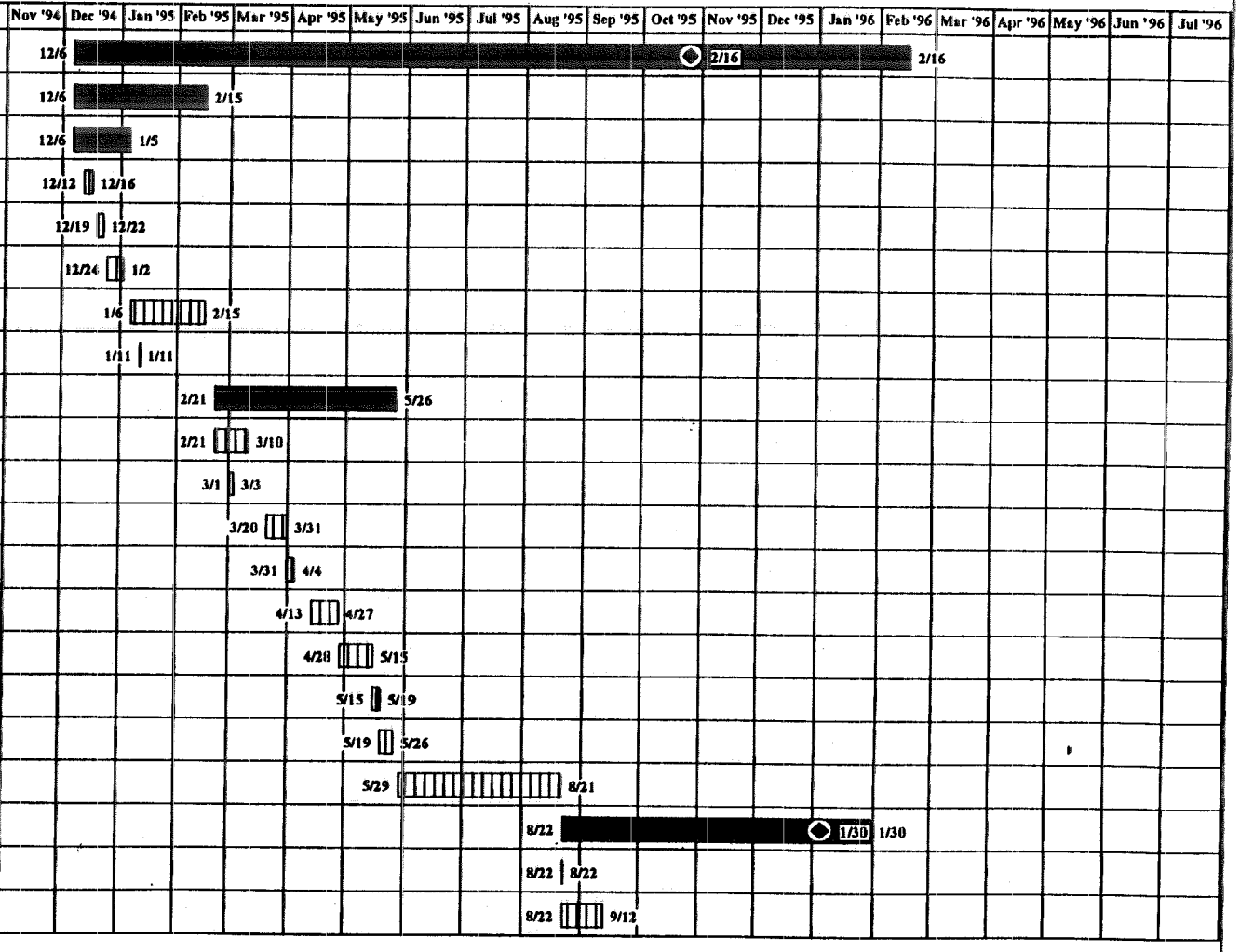

Completed

Not Finished

Not Started

Figure 4-1 OT&E Test Schedule

DSRCE OT&E TASK SCHEDULE

ID	Name	Nov '94	Dec '94	Jan '95	Feb '95	Mar '95	Apr '95	May '95	Jun '95	Jul '95	Aug '95	Sep '95	Oct '95	Nov '95	Dec '95	Jan '96	Feb '96	Mar '96	Apr '96	May '96	Jun '96	Jul '96
27	PHASE 2										8/30	9/1										
28	PHASE 4											9/12 9/13										
29	FULL POWER-UP TEST (12&16 UNITS)											9/18 9/20										
30	PHASE 5A											9/22 9/23										
31	DATA ANALYSIS											9/25	10/22									
32	RDVS												10/23 10/24									
33	BUEC/EMI												10/23	11/1								
34	FINAL TEST REPORT															1/30	1/30					
35	FUTURE EFFORTS												11/1				2/16 /16					
36	SYSTEM ANALYSIS (END-TO-END)												11/1			12/31						
37	TEST DATA REPORT														1/2	1/3						
38	DUAL CONTROL @ ZLA												11/15		12/15							
39	TEST DATA REPORT													12/18	12/18							
40	S-BUEC MODIFICATIONS													12/15			2/15					
41	TEST DATA REPORT															2/16	2/16					
42	VEARS																					
43	TEST DATA REPORT																					
44	ETVS															2/1	2/10					
45	TEST DATA REPORT															2/12	2/12					
46	MPS (PHASE VI)																					

Completed Not Finished

Not Started

Figure 4-1 OT&E Test Schedule

4.2 Test Participants

The OT&E test team participants consisted of a director and test engineers. The test director was responsible for overseeing all OT&E Operational and Integration testing. Additional responsibilities included coordination of all testing activities with the FAA RCE Program Manager, RCE Associate Program Manager, RCE Technical Program Manager, other test organizations, and the OT&E test team. The test director coordinated OT&E Operational and Integration testing activities and test efforts between the FAA Technical Center and Jacksonville. In addition, the test director defined the schedules and milestones for OT&E testing.

The OT&E test engineers were responsible for conducting all OT&E Operational and Integration testing at the FAA Technical Center and Jacksonville sites. Activities included; preparation of testbed configurations for each test scenario, providing results of all verification efforts, analyses, inspections, tests, data reduction and analyses, identification and documentation of problem areas, and the preparation of required documentation and test reports. Additional assistance was provided by the following; Radio Communication Link (RCL), Power, Transmitter/Receiver, and FAA Switch groups.

4.3 Test and Specialized Equipment

The following test equipment was used during each of the five phases:

Phase 1

1. System Test Controller - Hewlett Packard (HP) Vectra 386/25 MHz Personal Computer (PC) with 80 megabyte (MB) hard drive, 16 MB memory, Video Graphics Adaptor (VGA) controller, 1 serial port, 1 parallel port, and an HP-IB 82334B interface card. Test instrumentation control was via IEEE-488.2 bus using the HP-IB 82334B card.

2. HP 34401A Digital Multimeter - Full function, auto ranging, digital multimeter (DMM) with selectable resolution. DMM was used to verify Control and Remote RCE interface DC voltage levels, current, open circuit resistance, and chassis and signal ground resistance measurements.

3. HP 6643A DC Power Supply - Single output power supply capable of providing 0-35 VDC and 0-6 amps. Provided the Remote RCE with +24 VDC.

4. HP 6644A DC Power Supply - Single output power supply capable of providing 0-60 VDC and 0-3.5 amps. Provided the various voltages for manual testing.

5. HP 8903B Audio Analyzer - Audio measurement system with frequency range of 20 Hz to 100 kHz. Analyzer performed distortion analysis, frequency count, AC level true RMS, DC level, and signal to noise ratio measurements. Provided the test tones for audio range adjustments.

6. HP 5334A Universal Counter - 225 MHz counter with 12 digits/sec resolution.

7. HP 4945A Transmission Impairment Measuring Set (TIMS) - The TIMS measured the audio levels.

8. HP 4947A Transmission Impairment Measuring Set - Provided proper impedance matching for voice path testing of the RCE uplink and downlink noise, crosstalk, impulse noise, signal loss levels, and frequency parameters.

9. HP 4263A LCR Meter - The LCR meter measured impedance, inductance, and capacitance. The HP 4263A was used to measure RCE audio and Telco line impedances.

10. HP 54201D Digital Oscilloscope - Two Channel Digital Oscilloscope used to troubleshoot the vendor equipment when anomalies/problems were uncovered.

11. HP 54601A Digital Oscilloscope - Digital Oscilloscope with four channel, 100 MHz bandwidth. The HP 54601A was used to perform level and timing measurements during testing.

12. Telecom Analysis Systems, Inc (TAS) 1200 Series II Telephone Network Emulator - Telephone network emulator provided bi-directional impairments simulation. Simulated one four-wire trunk facility with 600 ohm impedance, VG6 line, satellite delays, and impulse noise.

13. Kikusui PCR 1000L AC Power Supply - Single Phase power supply with adjustable AC voltage of 0-300 VAC and frequency of 1-999 Hz. Provided Control RCE AC voltages and frequencies required for testing.

14. XITRON 2503 Power Analyzer - Single phase power analyzer capable of measuring RMS voltage and current, power volt amps, power factor, crest factor, voltage and current, inrush current, and total harmonic distortion. Used to measure the Control RCE AC power requirements.

15. Panasonic SV-3700 Professional Digital Audio Tape (DAT) Decks - Source and record Digital Audio Tape (DAT) decks were used in voice quality testing.

16. BMI 3060 Power Profiler - Used to perform power measurements and record data.

17. LeCroy 9424 Digital Oscilloscope - Used to perform power measurements and record data.

18. MM-100 Matchmaker - Bi-directional interface which converts 600 ohm balanced or unbalanced lines to a nominal level to feed a tape recorder and back again. The MM-100 was used to match impedance and levels between the RCE and Panasonic SV-3700 DAT decks during voice quality testing.

The majority of the test equipment with the exception of some ancilliary equipment was housed in the rack assemblies shown in Figure 4-2.

Phase 2

Same as Phase 1.

Phase 3

1. HP 8920A RF Communications Test Set - Provided a full range of communications tests for radio and communication system.

Phases 4 and 5a

1. Handheld VHF Transceiver - Used to verify the operational effectiveness and suitability of the RCE with live audio via the Transmitter/Receiver interfaces.

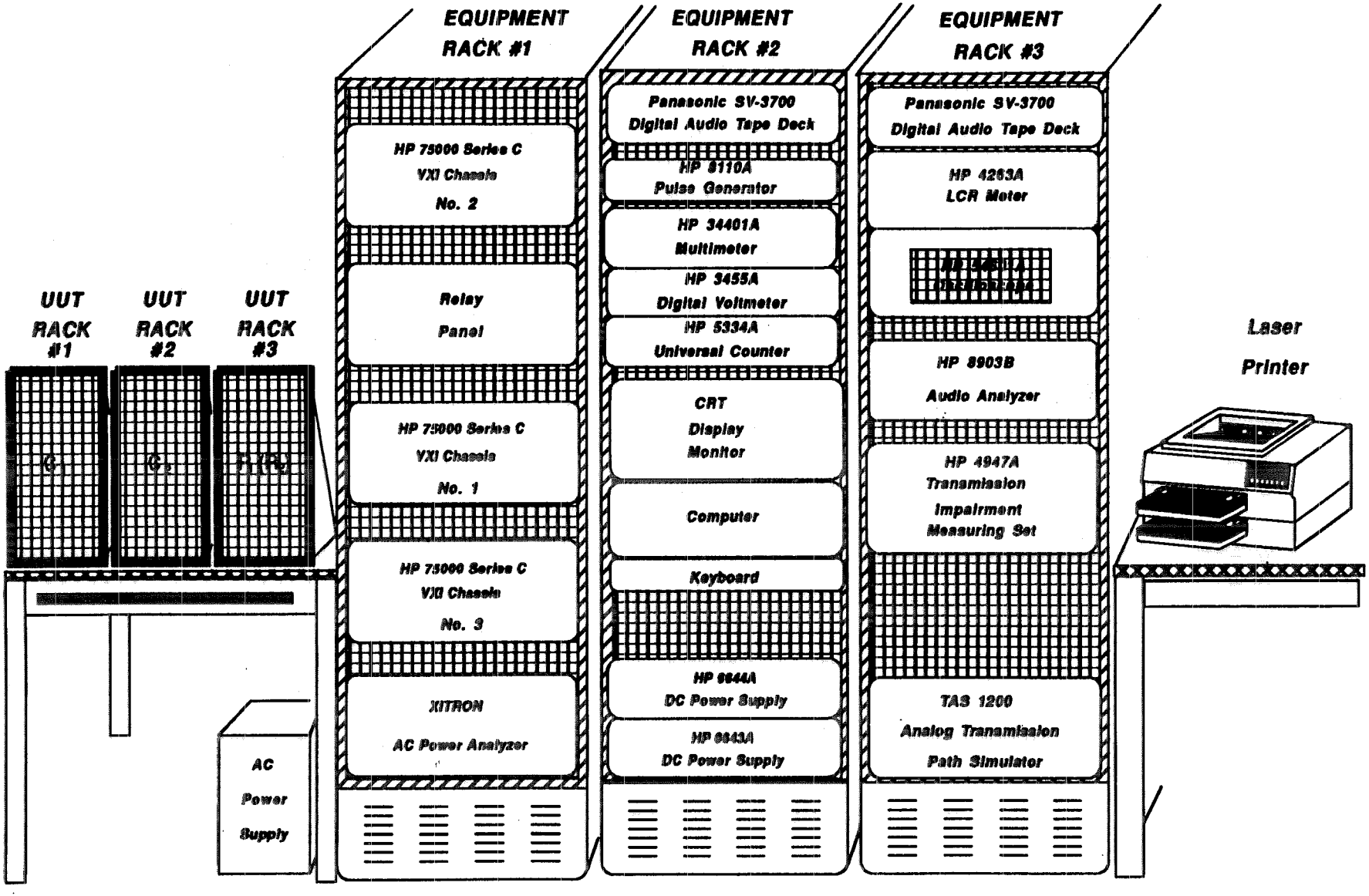

Figure 4-2 DSRCE Testbed Layout – Front View

2. Ernie's Radio Control Equipment (ERCE) - The ERCE simulated the radio interface (i.e. Transmitter/Receiver) used for Phase IV testing.

4.4 Test Objectives/Criteria

A transitional approach was used to measure the operational effectiveness and suitability of the RCE. The RCE Operational Capabilities Test (OCT) Testbed, where logistically feasible, was transitioned into a functionally integrated A/G testbed by replacing each simulated interface with an actual operational interface. This transition was performed in five* phases. Additional, nonscripted testing was performed beyond the scope of the test plan. The phases are as follows:

- Phase 1: RCE Testbed
- Phase 2: Radio Communication Link
- Phase 3: Radio Transmitter/Receiver Interface
- Phase 4: Voice Switching and Control Equipment
- Phase 5a and 5b: Integrated Air/Ground Testbed
- Nonscripted/Characterization Testing

* Note: A sixth phase, Maintenance Processor System (MPS)/RCE Interface, is not currently available.

OT&E began by utilizing an expanded OCT testbed with full simulation. As the phases progressed, the testbed configuration utilized less simulation to accommodate increasing usage of actual operational equipment. Each phase consisted of a series of functional tests that depended upon the operational requirements being tested.

In Phase 1, the RCE testbed was configured as a simulation only testbed. Modifications made to the RCE since OCT were verified by re-conducting OCT testing. Additional testing was also performed to meet the requirements of NAS-SS-1000 and ASE-230. The objective of Phase 1 was to establish the baseline for the RCE. The approach used for Phase 1 was an expanded OCT including end-to-end testing, timing, audio level, power configurations, impedance, isolation, voltage and current levels, noise, crosstalk, and voice quality tests.

In Phase 2, RCL, the analog transmission path simulator that interfaces between the Control and Remote RCE units was replaced with a microwave link. In this configuration the VSCE and the radio interface were simulated. Channel operations, timing and level tests were conducted to verify the RCE operational effectiveness and suitability utilizing the RCL, LDRCL, and the RCR as the transmission paths. Microwave transmission degradation, delays, and noise were introduced into the microwave link and the RCE was then evaluated under these conditions. The objective of Phase 2 was to verify the operational effectiveness and suitability of the RCE using a microwave link.

In Phase 3, Radio Transmitter/Receiver Interface, the objective was to verify the operational effectiveness and suitability of the RCE using radio Transmitter/Receiver interfaces. To accomplish this, the radio interface simulator was replaced with ITT AN/GRR and AN/GRT units and Motorola CM-200 units located at the Experimental RCAG site in building 176. Remote operations testing was performed to evaluate the RCE operational performance using

an operational radio interface. Tests performed in Phase 3 included PTT keying, audio tone, modulation, RF power, and power configurations on both types of radio Transmitter/Receivers.

In Phase 4, Voice Switching and Control Equipment (VSCE), the VSCE interface simulator was replaced with Air Traffic Control (ATC) consoles from various laboratories including VSCS, WECO (4 Channel) and ICSS-1A Type III. This configuration provided an actual environment at the control end. Tests included generating and receiving signals at the ATC consoles for all command, control and confirmation operations. The objective of Phase 4 was to verify the operational effectiveness and suitability of the RCE using VSCE.

In Phase 5, Integrated A/G testbed, the testing was split into two sub-phases. Phase 5a was conducted at the FAA Technical Center. During Phase 5a, the RCE was interfaced with the VSCE as in Phase 4, the RCL was re-integrated, and the Transmitter/Receivers were utilized to create an operational scenario. End-to-end testing on the RCE was conducted to verify OT&E Operational and Integration testing requirements in an integrated operational environment. Functionality, end-to-end performance, and system interface requirements were also verified. Phase 5b was conducted at the Jacksonville ARTCC. During Phase 5b, end-to-end testing was performed in an actual operational environment consisting of WECO VSCE, VG6 phone lines with LINCS capability, and ITT Radio Transmitters/Receivers. The difference between this configuration and OT&E Shakedown is that the latter was executed with actual pilots and controllers. The objective of Phase 5 was to verify the operational effectiveness and suitability of the RCE in an integrated operational environment.

Nonscripted/Characterization tests were also performed to account for situations that were not part of the original test procedures, but deemed necessary to properly test the RCE.

1. Impulse noise level of 65 dBrnC for a duration of 5 msec.
2. Impulse noise level of 75 dBrnC for a duration of 5 msec.
3. Impulse noise level of 90 dBrnC for a duration of 5 msec.
4. Impulse noise level of 65 dBrnC for a duration of 10 msec.
5. Impulse noise level of 75 dBrnC for a duration of 10 msec.
6. Impulse noise level of 90 dBrnC for a duration of 10 msec.

The Automated Testbed, equipped with a telephone network emulator, TAS 1200 Series II, was utilized to implement the above delays (**shall**$_{97}$). The VG6 Operation test, EI02-VG, was performed for each Delay subtest. For a detailed explanation of VG6 testing, refer to the EI02-VG test description (section 4.5.1.1.13).

4.5.1.1.5 VH02 - Noise

Test verified the optimum voice quality by maintaining a minimum level of noise and levels of impulse-type noise. The VH02 test (Noise and Impulse Noise), using the HP 4947A TIMS monitored all the Control and Remote RCE audio paths while a Telco communication path was maintained between Control Data Voice Card (C-DVC) and Remote Data Voice Card (R-DVC). The Noise test verified that the combined hum and noise level of any single path of an idle voice transmission path, with both ends of the transmission path properly terminated, **shall**$_{83}$ not exceed +23 dBrnC. The Impulse Noise test verified that the peak level of impulse-type noise generated within the system when measured on a single path of an idle voice transmission path, with both ends of the transmission path properly terminated, **shall**$_{84}$ not exceed one (1) hit within a 15 minute period above a level of +50 dBrnC for a duration of 10 msec or less. The audio paths were individually analyzed by the Automated Testbed in the following order based upon which audio option the RCE provided; Option 1: Two pairs of audio lines on the C-DVC or Option 2: Eight pairs of audio lines on the C-DVC. The following table provides a synopsis of the audio port configurations:

2 Ports (C-DVC)*8 Ports (R-DVC)		8 Ports (C-DVC)*8 Ports (R-DVC)	
TX	Main TX F1	Main TX F1	Main TX F1
TX	Stby TX F1	Stby TX F1	Stby TX F1
TX	Main TX F2	Main TX F2	Main TX F2
TX	Stby TX F2	Stby TX F2	Stby TX F2
RX	Main RX F1	Main RX F1	Main RX F1
RX	Stby RX F1	Stby RX F1	Stby RX F1
RX	Main RX F2	Main RX F2	Main RX F2
RX	Stby RX F2	Stby RX F2	Stby RX F2

The Automated Testbed measured the selected signal's response time from VSCE interface to the Remote Transmitter/Receiver (TX/RX) interface or from the Remote TX/RX interface to the VSCE interface utilizing the HP 54601A Oscilloscope. The signal occurring first was used to trigger the oscilloscope on channel A with the signal being measured occurring on channel B. The response time was the difference between the times of the signals on these two channels of the oscilloscope. This data was then compensated for any system or TAS 1200 Series II delays. The result was compared to the pass/failure criteria to determine if the measured signal meet the above requirements.

TM01-MB has a total of 16 signal combinations (subtests) with each subtest repeated 250 times.

4.5.1.1.2 LM01-MB - Receiver Mute/Unmute Level

This is a Type B interface test only. Test verified the Receiver Mute/Unmute signal attenuated the selected audio receive path from the Remote site to the Control RCE within the specified levels. The test utilized the HP 4947A TIMS to verify that the RCE receive voice signal (in the muted state) **shall**$_{96}$ be attenuated by a minimum of 40 dB.

4.5.1.1.3 EI02-DL - VG6 Operation with Delay

The RCE Channel is required to meet the External Interface requirements as outlined in FAA-E-2885 (**shall**$_{103}$) for transmission across an unconditioned VG6 line with propagation delays of up to 300 msec. This test was divided into three test sections. Each section introduced a propagation delay on the Telco path between the Control and the Remote RCE as followed:

1. 100 msec Delay
2. 200 msec Delay
3. 300 msec Delay

The Automated Testbed, equipped with a telephone network emulator, TAS 1200 Series II (**shall**$_{97}$), was utilized to implement the above delays. The VG6 Operation test, EI02-VG, was performed for each Delay subtest. For a detailed explanation of VG6 testing, refer to the EI02-VG test description (section 4.5.1.1.13).

4.5.1.1.4 EI02-IN - VG6 Operation with Impulse Noise

The RCE Channel is required to meet the External Interface requirements as outlined in FAA-E-2885 (**shall**$_{104}$) for transmission across an unconditioned VG6 line in the presence of impulse noise. The test was divided into six main test sections. Each section introduced impulse noise into the Telco path between the Control and the Remote RCE as follows:

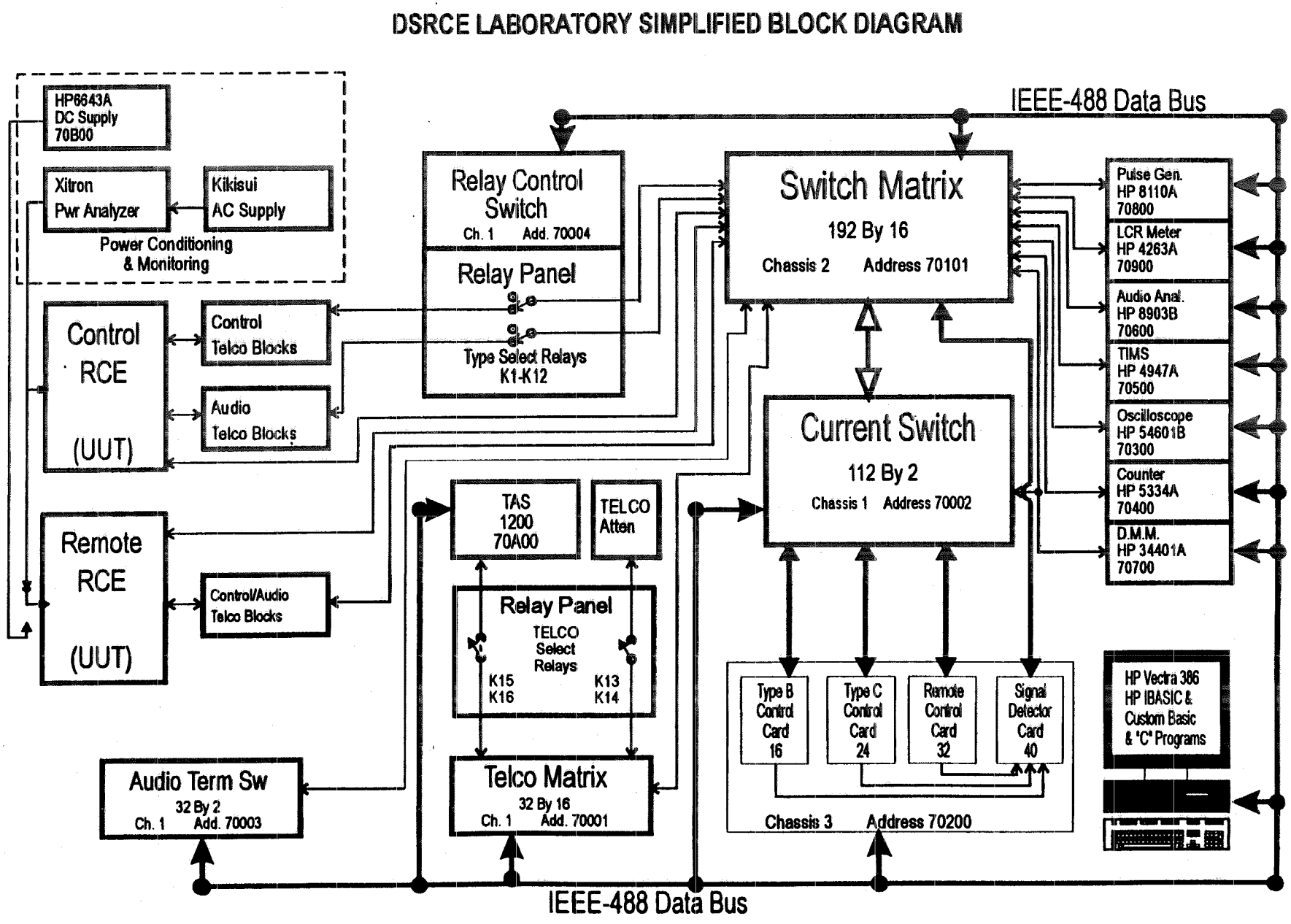

Figure 4-3 DSRCE Laboratory Simplified Block Diagram

4.5 Test Descriptions

4.5.1 Phase 1 - RCE Testbed

Phase 1 was subdivided into five categories related to the type of test being performed.

- Automated Tests
- Manual Tests
- Inspections
- Miscellaneous Tests
- Certifications

4.5.1.1 Automated Tests

The key hardware components of the Automated Testbed were the Units Under Test (UUT) racks, a switch matrix, a current matrix, custom protocards, and test equipment. The RCE units were installed in the UUT racks. The switch matrix was used to map control and audio signals to the test equipment. The current matrix provided a means to perform current measurements. The custom protocards simulated a VSCE interface by providing control signals to the RCE and detecting confirmation signals from the RCE. The automated test equipment in the Testbed included a transmission impairment measuring set, an analog path simulator, a digital multimeter, an oscilloscope, an LCR meter, and an audio analyzer. Except for TM01-MB and LM01-MB, all automated tests are non-type interface specific. See Figure 4-3 for a block diagram representation of the Automated Testbed configuration.

4.5.1.1.1 TM01-MB - Receiver Mute/Unmute Timing

This is a Type B interface test only. Test verified the Receiver Mute/Unmute signal attenuated the selected audio receive path from the Remote site to the Control RCE within a specified timing interval. The RCE is required to meet the timing requirements as outlined in FAA-E-2885 for various mute signals which were part of the Type B interface. This test measured the time of the following signals:

a. Muting and Unmuting response time of the Main/Standby Receiver for both Frequency 1 and 2. This was the time from when the VSCE provided the command to the RCE channel to mute/unmute the selected receiver to the instant the Remote RCE muted/unmuted the selected receiver's audio. These measurements are required to meet **shall**$_{94}$ of FAA-E-2885, a time of less then or equal to 100 milliseconds (msec).

b. Muting and Unmuting Confirmation response time of the Main/Standby Receiver for both Frequency 1 and 2. This was the time from when the Remote RCE executed the muted/unmuted function to the instant that the RCE channel provided confirmation to the VSCE. These measurements are required to meet **shall**$_{97}$ of FAA-E-2885, a time of less then or equal to 340 msec.

are tested to meet the FAA-E-2885 **shall**$_{99}$ requirements for the VSCE Type B interface (**shalls**$_{199\text{-}202}$), VSCE Type C interface (**shalls**$_{221\text{-}222}$) and the TX/RX interface (**shall**$_{112}$).

d. Transmitter/Receiver Select Confirmation voltage and current levels for Frequency 1 and 2 for both the Main/Standby TX/RX at the VSCE interface. These signals were tested while switching from main to standby and also while switching from standby to main. These measurements are tested to meet the FAA-E-2885 **shall**$_{99}$ requirements for the VSCE Type B interface (**shalls**$_{207\text{-}212}$) and the VSCE Type C interface (**shalls**$_{227\text{-}230}$).

e. Muting and Unmuting voltage and current levels for Frequency 1 and 2 at the VSCE interface when the RCE was configured for Type B. These measurements were tested to meet the FAA-E-2885 **shall**$_{99}$ requirements for the VSCE Type B interface (**shalls**$_{203\text{-}204}$).

f. Muting and Unmuting Confirmation voltage and current levels for Frequency 1 and 2 at the VSCE interface when the RCE was configured for Type B. These measurements were tested to meet the FAA-E-2885 **shall**$_{99}$ requirements for the VSCE Type B interface (**shalls**$_{213\text{-}215}$).

The Automated Testbed measured the selected signal's voltage level at the VSCE interface and/or the Remote TX/RX interface utilizing the HP 54601A Oscilloscope. The signal being tested was first activated/deactivated. The test signal level was read off the oscilloscope. The current measurements were taken with the HP 34401A DMM. The results were compared to the pass/failure criteria to determine if the measured signal met the requirements. Each subtest was repeated 10 times.

4.5.1.1.9 SC01 - B/C Single Channel Operation

Test verified that the RCE (**shall**$_{10}$) provided control of a maximum of two radio frequencies over one four-wire transmission path separately and simultaneously (**shall**$_{11}$). Radio control commands were provided by the Automated Testbed and measured at the RCE/VSCE and RCE/Radio interfaces for each frequency. Every permutation of the various combinations of commands (i.e. assertions of PTT and Standby PTT, Mute (Type B only), M/S Transmitter/Receiver selection, etc.) that an RCE Channel should perform was verified.

4.5.1.1.10 EI01-B/C - VSCE Voice Interface

The EI01-B test verified that the Impedance (600 ohms ± 20%) requirements (**shall**$_{205\text{-}206}$) and the Isolation (≥ 10 megaohms) requirements (**shall**$_{105}$) to the Type B Control RCE equipment's Voice interface (eg. VSCE interface). The EI01-C test verified the Impedance (600 ohms ± 10%) requirements (**shall**$_{231\text{-}232}$) and the Isolation (≥ 10 megaohms) requirements (**shall**$_{105}$) to the Type C Control RCE equipment's Voice interface (i.e. VSCE interface). The Automated Testbed utilized the HP 34410A DMM to measure resistance and the HP 4263A LCR meter to measure impedance values.

averaged over 1000 events. These measurements are also required to meet **should**$_{20}$ of FAA-E-2885, a time of less than or equal to 100 msec for 99.9% of event completions.

d. Main/Standby Transmitter/Receiver Select Confirmation (R-DVC to C-DVC) response times for the transition period of switching from main to standby and also for the transition period of switching from standby to main for both Frequency 1 and 2. These measurements are required to meet **shall**$_{93}$ of FAA-E-2885, a time of less than or equal to 250 msec when averaged over 1000 events. These measurements are also required to meet **should**$_{21}$ of FAA-E-2885, a time of less than or equal to 250 msec for 99.9% of event completions.

The Automated Testbed measured the selected signal's response time from VSCE interface to the Remote TX/RX interface or from the Remote TX/RX interface to the VSCE interface utilizing the HP 54601A Oscilloscope. The signal occurring first was used to trigger the oscilloscope on channel A with the signal being measured occurring on channel B. The response time was the difference between the times of the signals of these two channels on the oscilloscope. The response time was then compensated for any system or TAS 1200 Series II delays. The result was compared to the pass/failure criteria to determine if the measured signal met the requirements.

The test had a total of 32 signal combinations (subtests) with each subtest repeated 250 times.

4.5.1.1.8 LM01-B/C - Control Signal Levels

Test verified that the PTT and Main/Standby (M/S) selection levels were within the specified levels. The RCE is required to meet the current and voltage interface characteristics as outlined in FAA-E-2885 Appendix A, RCE VSCE interface Requirements, for the Type B/C interfaces and Appendix B, RCE Solid State Radio Equipments interface Requirements, for the Remote interface. This test measured the levels of the following signals:

a. PTT Keying and PTT Keying Release voltage and current levels for Frequency 1 and 2 on the Main/Standby transmitters at both the VSCE and TX/RX interface. These measurements are tested to meet the FAA-E-2885 **shall**$_{99}$ requirements for the VSCE Type B interface (**shalls**$_{197\text{-}198}$), VSCE Type C interface (**shalls**$_{219\text{-}220}$) and the TX/RX interface (**shall**$_{112}$).

b. PTT Keying Confirmation and PTT Keying Release Confirmation voltage and current levels for Frequency 1 and 2 on the Main/Standby transmitters at the VSCE interface These measurements are tested to meet the FAA-E-2885 **shall**$_{99}$ requirements for the VSCE Type B interface (**shalls**$_{216\text{-}218}$) and the VSCE Type C interface (**shalls**$_{223\text{-}226}$).

c. Main/Standby Transmitter/Receiver Select voltage and current levels for Frequency 1 and 2 at both the VSCE and TX/RX interface. These signals were tested while switching from main to standby and also while switching from standby to main. These measurements

TEST TONE PATH

C-DVC *1	C-DVC *2	R-DVC
RX	SRXF1	SRXF1
RX	MRXF2	MRXF2
RX	SRXF2	SRXF2

MONITOR PATH

C-DVC *1	C-DVC *2	R-DVC
TX	MTXF1	MTXF1
TX	STXF1	STXF1
TX	MTXF2	MTXF2
TX	STXF2	STXF2
TX	MTXF1	MTXF1
TX	STXF1	STXF1
TX	MTXF2	MTXF2
TX	STXF2	STXF2
TX	MTXF1	MTXF1
TX	STXF1	STXF1
TX	MTXF2	MTXF2
TX	STXF2	STXF2

*1 = option 1 *2 = option 2

Note: Refer to Sections 3.2.7 and 3.2.8 for additional information about the different PTT and audio options.

4.5.1.1.7 TM01-B/C - End-to-End System Timing

Test verified that end-to-end system timing was within the specified timing intervals. The RCE is required to meet the timing requirements as outlined in FAA-E-2885 for various signals utilizing either the Type B or Type C interface. This test measured the time of the following signals:

a. PTT Keying (C-DVC to R-DVC) and PTT Keying Release (C-DVC to R-DVC) response times for both Frequency 1 and 2 on the Main/Standby transmitters. These measurements are required to meet **shall**$_{87}$ of FAA-E-2885, a time of less than or equal to 100 msec when averaged over 1000 events. These measurements are also required to meet **should**$_{18}$ of FAA-E-2885, a time of less than or equal to 100 msec for 99.9% of event completions.

b. PTT Keying Confirmation (R-DVC to C-DVC) and PTT Keying Release Confirmation (R-DVC to C-DVC) response times for both Frequency 1 and 2 on the Main/Standby transmitters. These measurements are required to meet **shall**$_{89}$ of FAA-E-2885, a time of less than or equal to 340 msec when averaged over 1000 events. These measurements are also required to meet **should**$_{19}$ of FAA-E-2885, a time of less than or equal to 340 msec for 99.9% of event completions.

c. Main/Standby Transmitter/Receiver Select (C-DVC to R-DVC) response times for the transition period of switching from main to standby and also for the transition period of switching from standby to main for both Frequency 1 and 2. These measurements are required to meet **shall**$_{91}$ of FAA-E-2885, a time of less than or equal to 100 msec when

Note: See PTT Options, section 3.2.7 for additional information about the different audio options.

4.5.1.1.6 VH03 - Crosstalk

Test verified the optimum voice quality by maintaining crosstalk to a minimum value. The VH03 Test program, Crosstalk, utilizes a test tone (1004 Hz at 0 dBm) transmitted through an audio pathway while the HP 4947A TIMS sequentially monitored paths susceptible to crosstalk. The crosstalk attenuation **should**$_{16}$ be no less than 50 dB, and as an absolute minimum **shall**$_{85}$ be no less than 40 dB. The audio ports that share the test tone path (C-DVC and a R-DVC audio path) were not monitored. A communication link was maintained between the C-DVC and R-DVC site units at all times. Each audio path was individually analyzed in sequential order as depicted in the following table.

Note: There are two audio configuration options that the RCE can exhibit; Option 1: Two pair of audio lines on the C-DVC (TX and RX) or Option 2: eight pairs of audio lines on the C-DVC (Main/Standby path for both frequency 1 and 2 for both TX and RX).

TEST TONE PATH			MONITOR PATH		
C-DVC		R-DVC	C-DVC		R-DVC
*1	*2		*1	*2	
TX	MTXF1	MTXF1	RX	MRXF1	MRXF1
			RX	SRXF1	SRXF1
			RX	MRXF2	MRXF2
			RX	SRXF2	SRXF2
TX	STXF1	STXF1	RX	MRXF1	MRXF1
			RX	SRXF1	SRXF1
			RX	MRXF2	MRXF2
			RX	SRXF2	SRXF2
TX	MTXF2	MTXF2	RX	MRXF1	MRXF1
			RX	SRXF1	SRXF1
			RX	MRXF2	MRXF2
			RX	SRXF2	SRXF2
TX	STXF2	STXF2	RX	MRXF1	MRXF1
			RX	SRXF1	SRXF1
			RX	MRXF2	MRXF2
			RX	SRXF2	SRXF2
RX	MRXF1	MRXF1	TX	MTXF1	MTXF1
			TX	STXF1	STXF1
			TX	MTXF2	MTXF2
			TX	STXF2	STXF2

4.5.1.1.11 EI02-IM - Telephone Line Impedance

Test verified that the Impedance (600 ohms ± 10%) requirements of **shall**$_{105}$ for both the Control and Remote RCE equipment's Telco interfaces. The Automated Testbed utilized the HP 34410A DMM and the HP 4263A LCR meter to measure impedance values.

4.5.1.1.12 EI02-IS - Telephone Line Isolation

Test verified the Isolation (≥ 10 megaohms) requirements of **shall**$_{105}$ for both the Control and Remote RCE equipment's Telco interfaces. The Automated Testbed utilized the HP 34410A DMM to measure impedance values.

4.5.1.1.13 EI02-VG - VG6 Operation, Interface B/C,

The RCE Channel is required to meet the External Interface requirements as outlined in FAA-E-2885 (**shall**$_{101\text{-}102}$) for transmission across an unconditioned VG6 line. The Automated Testbed, equipped with a telephone network emulator, TAS 1200 Series II, was utilized for this test. Eight subtests were formulated to test VG6 four-wire transmission path parameters as outlined in Bell Publication TR-TSY-000335, Issue 2, for voice, control, and data signals. Each of these subtests either attenuated or degraded the Telco path between the Control and the Remote RCE as followed:

1. Nominal levels with no degradation or additional attenuation.
2. Attenuation of -1 dB across the band.
3. Envelope Delay of 804 to 2604 Hz for 700 μsec.
4. White Noise added in at 41 dBrnC.
5. Intermodulation Distortion, -33 dB at the second harmonic and -40 dB at the third harmonic.
6. Phase Jitter of 10 degrees added in.
7. Frequency shift of +1 Hz.
8. Frequency shift of -1 Hz.

The TAS emulator was used to implement the above test conditions. The degradation of the Telco lines was cumulative as the test progressed through the eight subtests. For example, Subtest four contained White Noise, plus Envelope Delay and an Attenuation of -1 dB.

Each of these eight subtests contained the same three basic parameter tests. These tests were performed in the same manner and order for all eight subtests as follows:

1. TM01-B/C - End-to-End System Timing Test for both the B and C Interface.

2. LM01-B/C - Control Signal Level Test for both the B and C Interface.

3. TELCO_XX - Audio Test for both the B and C Interface.

The TM01-B/C End-to-End System Timing Test and the LM01-B/C Control Signal Level Test are both described in Sections 4.5.1.1.7 and 4.5.1.1.8 of this report with the exception that they were only executed one time for each of the eight degradations.

The TELCO_XX Audio Test utilized the testbed's HP 4947A TIMS, to inject a test tone and monitor output level to determine impact of Telco degradations on audio level.

For the third OT&E effort, a special VG6 test case was set up. It consisted of the worst case scenarios of VG6 Operation (Frequency Shift of +1 Hz), operational testing with maximum satellite delay (300 msec), and maximum impulse noise (90 dBrnc, 10 msec). The VG6 worst case testing consisted of executing the following separate tests; TM01-B , TM01-MB, LM01-B, LM01-MB, and TELCO_XX. These tests are described in Sections 4.5.1.1.7, 4.5.1.1.1, 4.5.1.1.8, and 4.5.1.1.2.

4.5.1.1.14 EI03 - RCE/Solid State Remote Radio Equipment Interface

Test verified Appendix B requirements of **shall**$_{112}$, Voice interface Impedance (600 ohms ± 10%), Transmitter keying, Main/Standby Transmitter/Receiver Select (aka Antenna Transfer Relay (ATR), **shall**$_{111}$). Test also verified the Isolation (≥ 10 megaohms) requirements of **shall**$_{105}$ for Remote RCE equipment's Transmitter/Receiver interfaces. The Automated Testbed utilized the HP 34410A DMM to measure resistance and voltage values. The HP 4263A LCR meter was used to obtain impedance values.

4.5.1.1.15 CN03 - Single Channel Configuration

The RCE Channel is required to meet Electrical requirements as outlined in FAA-E-2885 (**shall**$_{135}$) when interfacing with AC voltages at both the control facility and the remote site. The RCE Channel is also required to meet Electrical requirements as outlined in FAA-E-2885 (**shall**$_{146}$) when interfacing with DC voltages at the remote site. This test was divided into twelve main test sections. In each section of the test the applied power and frequency were varied as indicated in order to evaluate the operation of the channel over the specified ranges:

1. Control/Remote units: 102 VAC at 57 Hz.

2. Control/Remote units: 120 VAC at 57 Hz.

3. Control/Remote units: 120 VAC at 63 Hz.

4. Control/Remote units: 138 VAC at 63 Hz.
5. Control/Remote units: 177 VAC at 57 Hz.
6. Control/Remote units: 208 VAC at 57 Hz.
7. Control/Remote units: 208 VAC at 63 Hz.
8. Control/Remote units: 239 VAC at 63 Hz.
9. Control/Remote units: 276 VAC at 60 Hz.
10. Control unit: 120 VAC at 60 Hz, Remote unit: 18 VDC at 3.5 amps.
11. Control unit: 208 VAC at 60 Hz, Remote unit: 24 VDC at 3.5 amps.
12. Control unit: 240 VAC at 60 Hz, Remote unit: 30 VDC at 3.5 amps.

The Automated Testbed, using a Kikusui AC Power Supply model PCR 1000L, was programmed for the above AC voltages. An HP 6643A DC Power Supply was utilized for the DC voltages.

Each of these twelve tests contained the same five subtests. These tests were performed in the same manner and order for all twelve tests as follows:

1. SC01 - Single Channel Configuration.
2. TM01-B - End-to-End System Timing Test for the Type B Interface.
3. TM01-MB - Receiver Mute/Unmute Timing.
4. LM01-B - Control Signal Level Test for the Type B Interface.
5. LM01-MB - Receiver Mute/Unmute Level.

The subtests are described in sections 4.5.1.1.9, 4.5.1.1.7, 4.5.1.1.1, 4.5.1.1.8, and 4.5.1.1.2 of this report respectively. The following subsets of each subtest were performed 5 times for each power configuration; TM01-B (12 of 32 subtests), TM01-MB (4 of 16 subtests), LM01-B (18 of 56 subtests), and LM01-MB (2 of its subtests).

4.5.1.1.16 EI02-TL - Telephone Line Transmit Adjust

Test verified the ability to adjust the Telco transmit level (min and max) when the input levels at the VSCE and radio interfaces were varied by the Automated Testbed to the requirements of the specification (min, nominal, and max). Test verified the ability of the

RCE equipment to transmit a test tone at the transmission path interface adjustable over the range of +5 dBm to -20 dBm (**shall**$_{106}$). This also verified the gain adjustment for transmit and receive Telco paths are independently adjustable (**shall**$_{108}$).

4.5.1.1.17 EI02-RL - Telephone Line Receive Adjust

Test verified the ability to adjust the output level (min and max), at the VSCE and Radio interfaces when the Telco Receive input levels were varied (min, nominal, and max) by the Automated Testbed. At each Telco receiver input level, the operator varied the appropriate output level. Test verified the ability of the RCE equipment to receive a test tone at the transmission path interface adjustable over the range of +5 dBm to -20 dBm (**shall**$_{107}$). Test also verified the gain adjustment for transmit and receive Telco paths are independently adjustable (**shall**$_{108}$).

4.5.1.2 Manual Tests

4.5.1.2.1 ER01-B - Electrical Requirements

This is a Type B interface test only. Test verified **shall**$_{146}$, the Control RCE furnishes +12 VDC ± 5% @ > 50 mA to the VSCE and the Remote RCE supplies +24 VDC ± 25% @ 600 mA. The HP 34401A DMM was utilized in conjunction with the test fixture as shown in Figure 4-4 to perform this test.

4.5.1.2.2 ER02-B - Functional Signal Inputs

This is a Type B interface test only. The RCE Type B interface **shalls**$_{196\text{-}218}$ have the capability to accept a +12.0 VDC ± 25% @ < 0.5 mA to activate the Type B control signals. Type B confirmation signals are expected to have the ability to sink 20 mA without damaging the unit. Test ensured Type B VSCE interface accepted proper voltage and current levels. The HP 34401A DMM and the HP 6644A power supply were utilized in conjunction with the test fixture as shown in Figure 4-5 to perform this test.

4.5.1.2.3 AC02 - Isolation

Test verified **shall**$_{145}$, the input AC power transformer primary winding was isolated from the chassis. A DMM was used to perform this test.

4.5.1.2.4 GN01 - AC Grounding

Test verified **shall**$_{147}$, common ground was utilized for the AC power source. A DMM was used to perform this test.

4.5.1.2.5 GN02 - Chassis Grounding

Analyzer was used as the signal source and an HP 34401A DMM was used to measure Vs and Vm. The measured value for Vs was 0.58346, and for Vm was 0.000010 VAC at 1000 Hz. Performing the calculation for Longitudinal Balance (LB = 20 Log |Vs/Vm|), given in the standard, it was determined that the Test Fixture balance was 95 dB.

The test fixture, shown in Figure 4-6, consisted of two essentially identical circuits, each of which allowed identical measurements to be taken. They were labeled "A" and "B" for clarity on the test fixture. For our purposes, circuit "A" was used for all Longitudinal Balance measurements and circuit "B" was used to validate circuit "A". A Microsoft Excel 4.0 script was utilized to calculate Longitudinal Balance.

4.5.1.2.11 IT01 - PTT (M/S) Transfer Inhibit

Test verified **shall**$_{25}$, that the RCE PTT Main/Standby Transmitter Transfer Inhibit feature operates properly in the uplink direction. The PTT Main/Standby Transmitter Transfer Inhibit test consisted of asserting each PTT (Main/Standby) and attempting to select (transfer) the radio not in use. For example, if the Standby PTT for frequency 2 was asserted, then selection of the Main Transmitter for frequency 2 should be inhibited until the Standby PTT is released.

4.5.1.2.12 LR01 - LRU Removal and Insertion

Test verified that the Line Replacement Units (LRU) within the RCE channel were not damaged after the execution of an LRU removal and insertion procedure. The LRU removal and insertion test consisted of replacing a DVC while power was applied to the RCE (**shall**$_{151}$). The RCE **shall**$_{152}$ prohibit insertion or connection of a plug-in LRU that is incorrectly oriented.

4.5.1.2.13 MN01 - Front Panel Status Indicators

The RCE Channel is required to meet certain Maintenance requirements as outlined in FAA-E-2885 for **shall**$_{71}$. As part of these requirements the following visual status indicators were tested by stimulating the corresponding control signals at the testbed connector.

1. Keying and unkeying indication for each frequency (PTT).
2. Main/Standby status for each pair of transmitters and receivers for each frequency.
3. Remote muted/not-muted status for each frequency on the Type B interface.
4. Communication link status between the Control and Remote RCE.
5. Operational status indications on both the Control and Remote RCE.
6. Power indicators on both Control and Remote RCE.

Test verified **shall**$_{146}$, no grounding differences in signal or power exist between all surfaces of the front panels, chassis, frames and cabinets. A DMM was used to perform this test.

4.5.1.2.6 CF01 - Harmonic Content

Test verified **shall**$_{138}$, the total harmonic distortion of the AC load current, at the ATC facilities, is in accordance with FAA-G-2100F, General Requirements, Electronic Equipment. The test was performed on the original power supply, a prototype power supply, a modified prototype power supply, and a production unit power supply with a fan. A BMI 3030 Power Profiler and a LeCroy 9314 Digital Oscilloscope were utilized to perform power measurements and record data.

4.5.1.2.7 CF02 - Inrush Current Limiting

Test verified **shall**$_{139}$, the peak inrush current relative to the steady state peak current of each ATC system/subsystem is in accordance with FAA-G-2100F specifications. The test was performed on the original power supply, a prototype power supply, a modified prototype power supply, and a production unit power supply with a fan. A BMI 3030 Power Profiler and a LeCroy 9314 Digital Oscilloscope were utilized to perform power measurements and record data.

4.5.1.2.8 CF03 - Control Facility Power Factor

Test verified **shall**$_{141}$, the RCE power factor was in accordance with FAA-G-2100F specifications. The Power Factor for equipment with power less than 2000 Watts has to be better than 0.7. The test was performed on the original power supply, a prototype power supply, a modified prototype power supply, and a production unit power supply with a fan.

4.5.1.2.9 VH01 - Voice Quality

Test verified the voice quality of the RCE against a pre-established baseline. Voice quality was validated by calculating the composite of the Diagnostic Rhyme Test (DRT) and Diagnostic Acceptability Measure (DAM) scores. The RCE voice quality composite score **shall**$_{82}$ equal or exceed 91.0 ± 0.7. There were 4 sets of voice recordings analyzed by Dynastat, Inc. Two Panasonic Professional SV-3700 DAT decks (source and record) were utilized to perform the first two sets of tests. The third and fourth sets of voice recordings used a Match-Maker MM-100 bi-directional interface to match impedance and levels between the RCE and the Panasonic SV-3700 DAT decks.

4.5.1.2.10 EI02-LB - Longitudinal Balance

Test verified longitudinal balance of all audio paths. The RCE **shall**$_{105}$ have a Longitudinal Balance ≥ 40 dB. The EI02-LB Test Fixture used in these tests was built in accordance with the guidelines contained in ANSI/IEEE Std 455-1985 and calibrated following the Balance Set Calibration procedure outlined in that standard. A Hewlett Packard HP 8903B Audio

TEST CONNECTIONS
ELECTRICAL REQUIREMENTS (TYPE B INTERFACE)
ER02-B

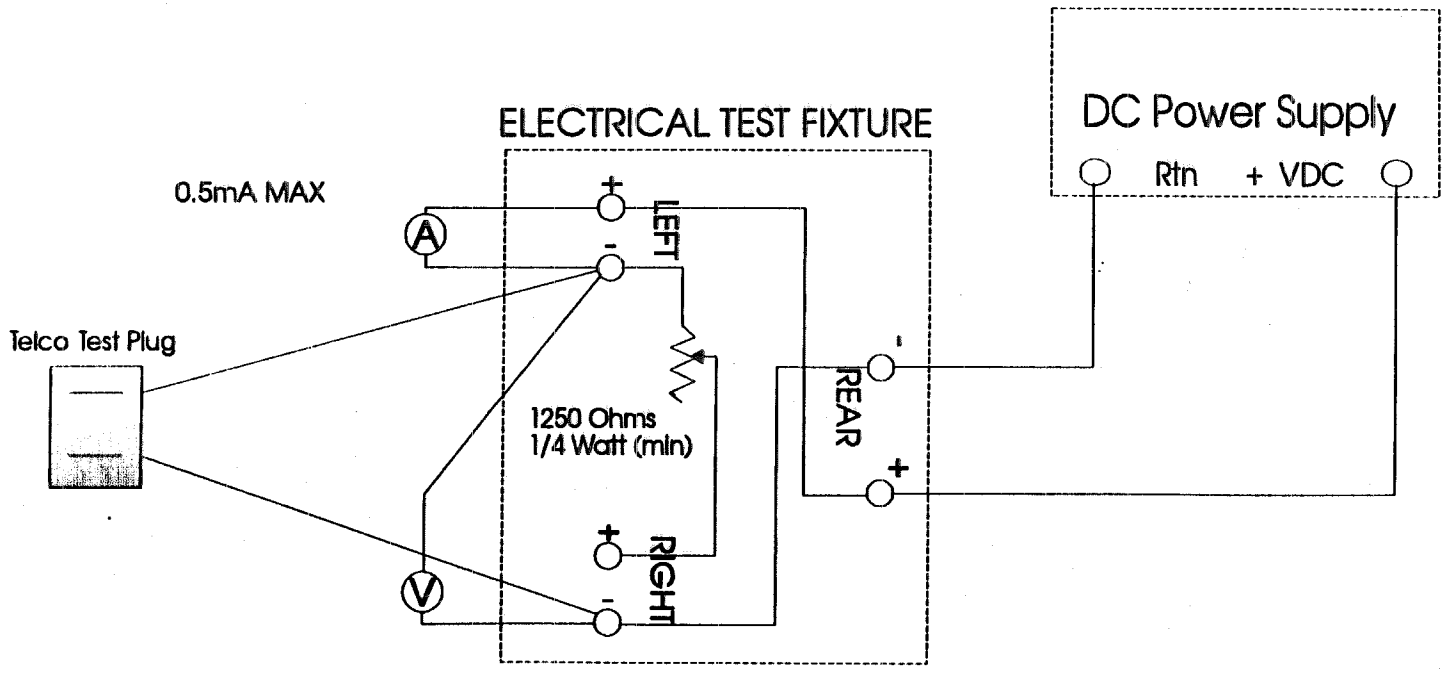

Figure 4–5 Test Connections, Type B Functional Signal Inputs – ER02–B

TEST CONNECTIONS
ELECTRICAL REQUIREMENTS (TYPE B INTERFACE)
ER01-B

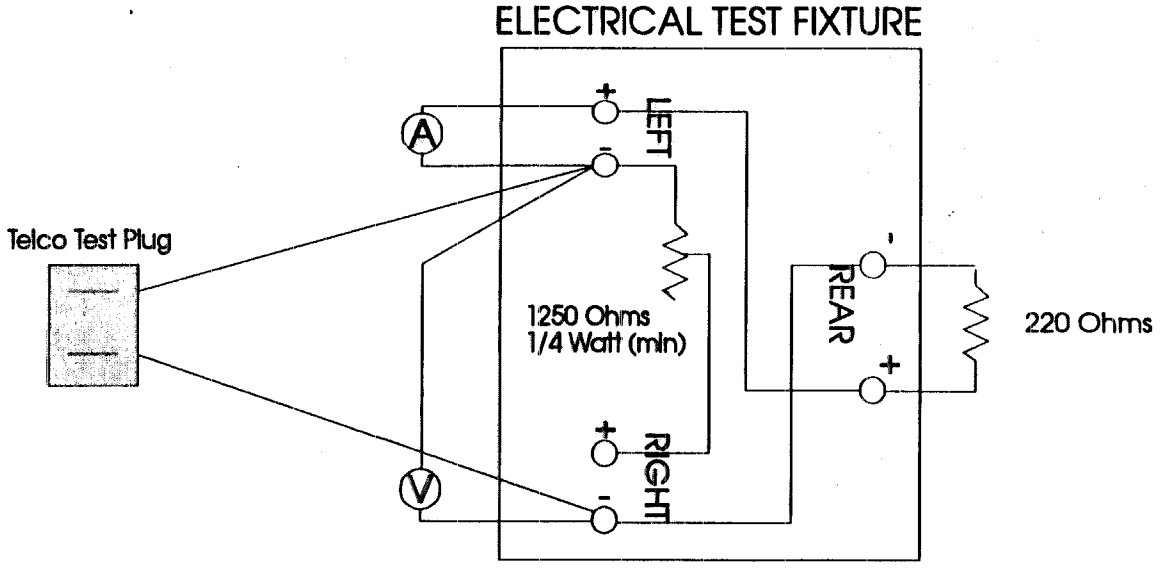

Figure 4-4 Test Connections, Type B Electrical Requirements – ER01–B

Mute/Unmute Confirm Freq 2	VSCE-B	1	27
Main/Standby Transmit Select Confirm Freq 1	VSCE-B	1	31
Main/Standby Transmit Select Confirm Freq 2	VSCE-B	1	33
Main/Standby Receive Select Confirm Freq 1	VSCE-B	1	35
Main/Standby Receive Select Confirm Freq 2	VSCE-B	1	37
Positive 12 VDC	VSCE-B	11	45
Positive 24 VDC	VSCE-B	11	49

Signal	Interface	Testbed Telco Block Block #	Pin #
Main Transmitter Keying Freq 1	TX/RX	11	3
Standby Transmitter Keying Freq 1	TX/RX	11	15
Main Transmitter Keying Freq 2	TX/RX	11	23
Standby Transmitter Keying Freq 2	TX/RX	11	35
Main/Standby Transmit Select Freq 1	TX/RX	11	5
Main/Standby Transmit Select Freq 2	TX/RX	11	25
Main/Standby Receive Select Freq 1	TX/RX	11	9
Main/Standby Receive Select Freq 2	TX/RX	11	29
Ground	VSCE	1	46

4.5.1.3 Inspections

4.5.1.3.1 AC01 - AC Line Controls

Inspected to verify **shalls**$_{142\text{-}144}$, each RCE unit has the required AC line controls. The RCE equipment is required to provide an AC line switch and an AC line indicator.

4.5.1.3.2 GN02 - Ground

Test verified **shall**$_{149}$, RCE unit was equipped with a lug capable of accepting No. 14 AWG wire.

4.5.1.3.3 MC02 - Interconnection Cable Inspection

Inspected to verify **shall**$_{155}$, all interconnection cables and connectors are provided and are properly constructed for overhead and under-floor distribution.

4.5.1.3.4 MC03 - Cable Connector Inspection

Inspected the cables for connector safeguard compliance. The Cable Connector Inspection consisted of verifying the following:

TEST CONNECTIONS
DRY RELAY CONTACT PARAMETERS (TYPE C INTERFACE)
DRO1-C

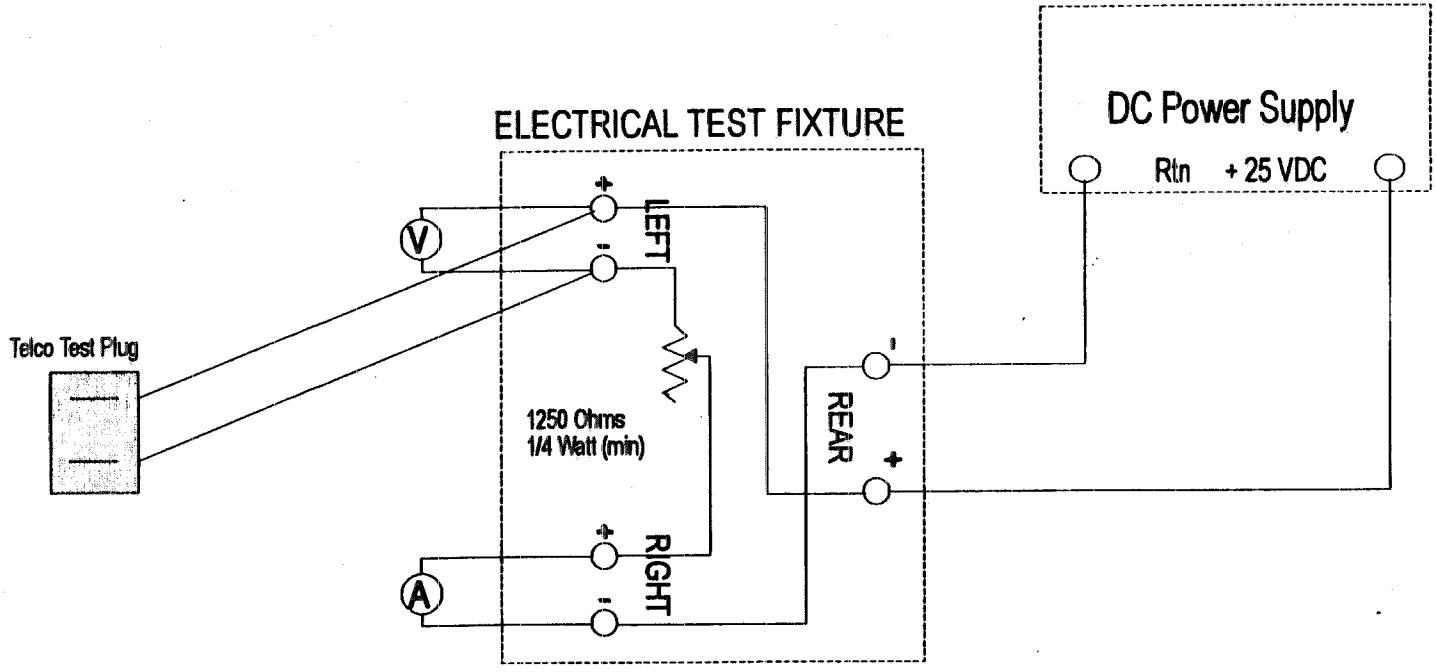

Figure 4–7 Test Connections, Type C Dry Relay Contact Parameters – DR01–C

4.5.1.2.14 MN02 - Front Panel Status Maintenance Controls

The RCE Channel is required to meet certain Maintenance requirements as outlined in FAA-E-2885 for **shall**$_{72}$. The front panel maintenance controls were manually tested on both the Control and Remote units for the following functions:

1. Keying and unkeying capabilities (PTT) for each frequency.

2. A Transmitter Main/Standby switch for each frequency.

3. A Receiver Main/Standby switch for each frequency.

The front panel status indicators were utilized to determine the states of the signals being controlled.

4.5.1.2.15 MN03 - Voice Access Jacks

The MN03 test consisted of manually verifying the correct functioning of the voice access jacks. The RCE specification requires that voice access jacks **shall**$_{77}$ be provided and **should**$_{14}$ be on the RCE front panel at all Control facilities and Remote sites. Jacks **shall**$_{78}$ be provided for line, monitor, and drop throughputs for both send and receive audio and four-wire transmission paths.

4.5.1.2.16 DR01-C - Dry Relay Contact Parameters

This is a Type C interface test only. Test verified that the RCE provided dry relay contact closures to the VSCE for the Type C interface. The RCE Type C interface **shalls**$_{223\ \&\ 227}$ provide dry relay contacts capable of handling +25 VDC and current capability of 20 mA without damaging the unit. The test fixture shown in Figure 4-7 was used in conjunction with the HP 6644A Power Supply to perform the test.

4.5.1.2.17 ER03 - Output Short Circuit

Test verified that the RCE provides adequate short circuit protection on its output drivers A single RCE channel was configured with a Type B interface at the Automated Testbed. An end-to-end system test together with a test of the front panel maintenance controls was conducted on the channel. A 10 second short to ground was applied to each of the following output drivers while their outputs were in an asserted state. A DMM was utilized to ensure that each test point was properly asserted during this test.

		Testbed Telco Block	
Signal	Interface	Block #	Pin #
PTT Confirm/PTT Release Confirm Freq 1	VSCE-B	1	41
PTT Confirm/PTT Release Confirm Freq 2	VSCE-B	1	43
Mute/Unmute Confirm Freq 1	VSCE-B	1	25

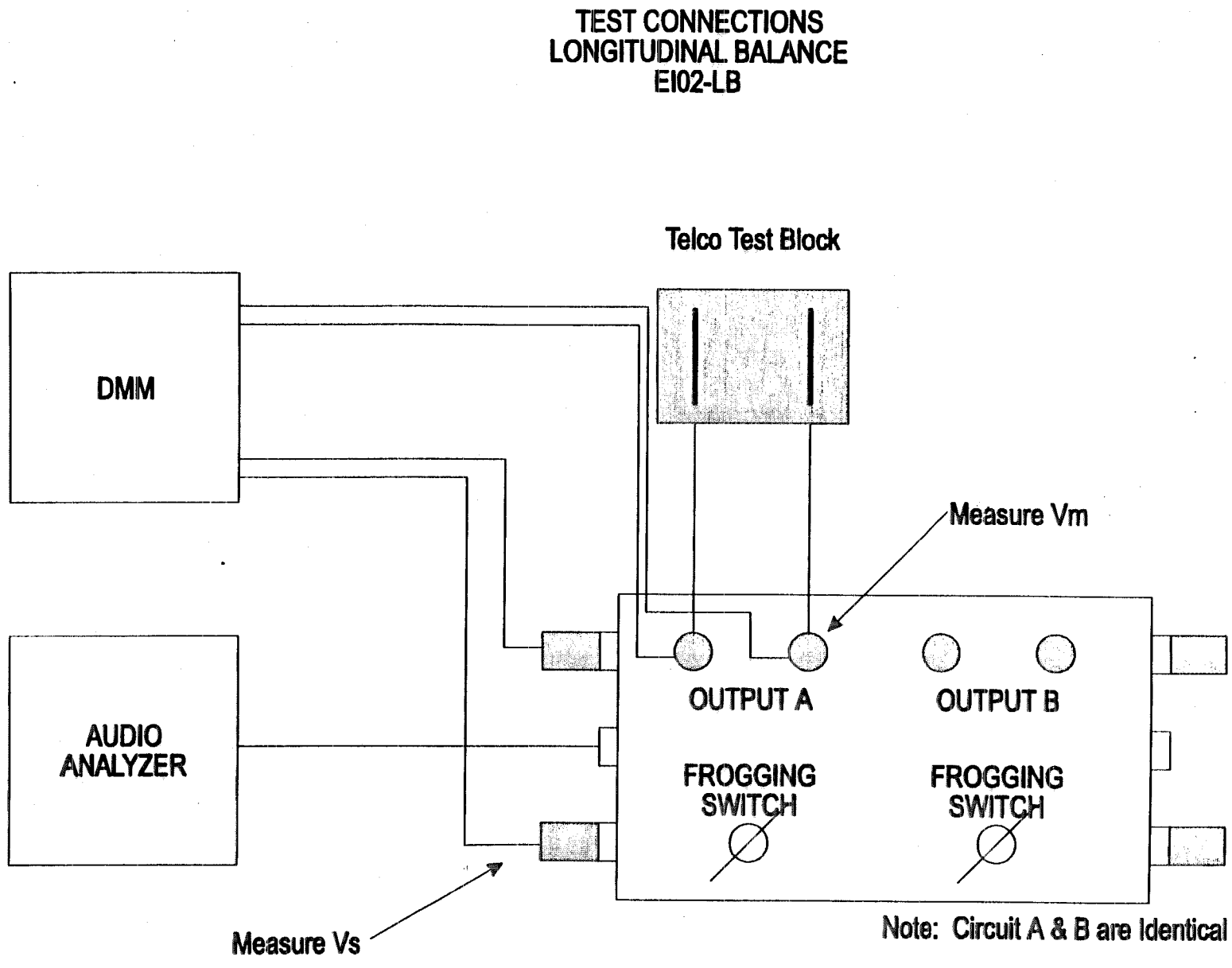

Figure 4-6 Longitudinal Balance Test Setup – EI02-LB

3. SC01-B/C - Single Channel Operation for both Type B and C Interfaces.

4. TELCO_XX - Audio Test for both Type B and C Interfaces.

TM01-B/C, TM01-MB, and SC01 are described in sections 4.5.1.1.7, 4.5.1.1.1, and 4.5.1.1.9 respectively of this report.

The TELCO_XX Audio Test utilized the HP 4947A TIMS to measure the receive voice level going to the VSCE based on FAA-E-2885 (**shall**$_{206}$) and the transmit voice level going to the Radio Transmitter based on FAA-E-2885 (**shall**$_{112}$).

Configuration #3 parameters (0 dBm) and Configuration #4 parameters (-8 dBm/Default) were used in this test for both Type B and C interfaces.

4.5.1.4.3 CN02 - Alternate Configurations, Priority/Non-Priority Mode

Test verified the Lockout and Frequency Override capabilities at Dual Control Facilities for the RCE equipment. There were two functionally separate tests, Non-Priority Mode (**shalls**$_{34\text{-}38}$) and Priority Mode (**shalls**$_{39\text{-}48}$). Testing consisted of performing manual tests and automated tests. The automated tests consisted of the end-to-end System Timing (TM01), Channel Operation (SC01), and Audio Path (TELCO_XX) tests. The tests were conducted with the Telco aligned for a 0 dBm test tone (Configuration #3). The control sites were configured utilizing both Type B and Type C equipment. Control Site #1 was configured as Type B and Control Site #2 was configured as Type C.

The CN02 manual tests verified the shall requirements of the specification, while the automated tests verified the RCE equipment Alternate Configurations (Priority/Non-Priority mode) still met the timing and operational requirements of the specification.

4.5.1.4.4 SC02 - Transmission Path Loss

The RCE Channel is required to meet Radio Control requirements as outlined in FAA-E-2885 for **shall**$_{32}$ and **shall**$_{33}$. The purpose of this test was to ensure that the RCE channel continues to function for transmission path interruptions less than three seconds, the channel properly recovers to an alternate transmission path for path interruptions greater than three seconds, and if no alternate path is provided, the RCE channel will properly terminate its transmission.

The Testbed's Interactive Test Generator II function, HPTIG2, was utilized to perform this test. The HPTIG2 task generator performed the TELOSS and TELGAIN routines while the HP 54601A Oscilloscope was used to measure the loss of and re-establishment of the Telco transmission path. The RCE Channel was configured via an MDT with the Configuration #3 (0 dBm) values.

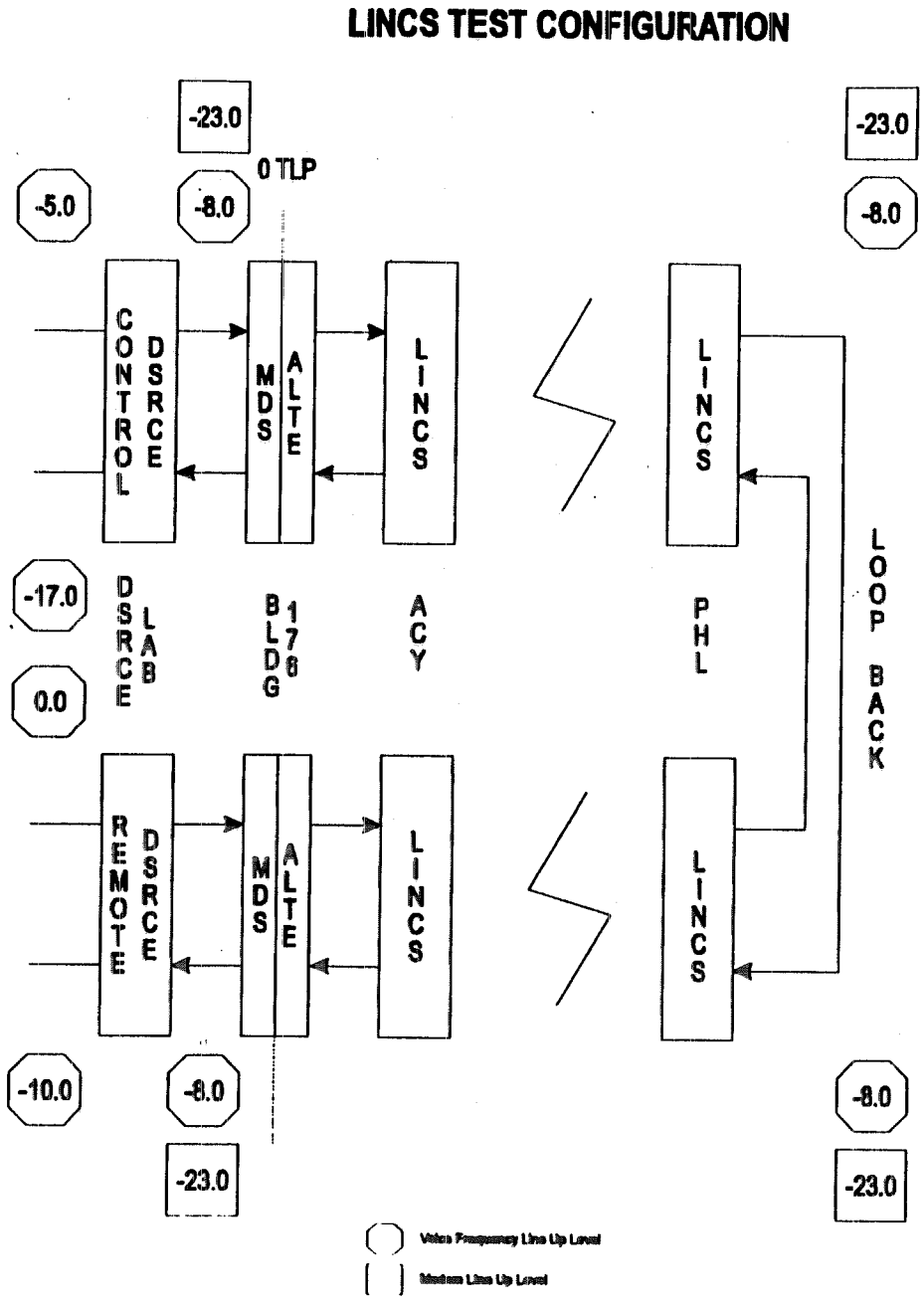

Figure 4-8 LINCS Testing

4.5.1.4.1.1 Simulated LINCS Test

The testbed was utilized to simulate a VG6 transmission path which included a LINCS holding tone by properly configuring the TAS 1200 Series II. The test consisted of the Timing (TM01-B) and Single Channel Operational (SC01) tests.

4.5.1.4.1.2 Philadelphia Analog Cross Patch LINCS Test

This test consisted of two MCI installed LINCS VG6 circuits with TELLABS Rev B Termination modules between building 176 located at the FAA Technical Center and PHL. The LINCS lines were installed and tested by MCI. These two circuits complied with FAA Order 6000.22 requirements for VG6 circuits. The LINCS lines were cross patched at the Philadelphia International Airport in order to provide the ability to transmit and receive the same voice/data to and from building 176. The Telco interface of each unit was connected to each end of the cross patched LINCS lines. The test consisted of a system level functional test utilizing front panel commands. Figure 4-8 illustrates the tested LINCS configuration.

4.5.1.4.1.3 New York TRACON Digital Cross Patch LINCS Test

The LINCS lines were digitally cross patched at New York TRACON in order to bypass the analog Termination modules located at the PHL. A system level functional test was performed utilizing front panel commands.

4.5.1.4.1.4 Philadelphia End-to-End LINCS Test

The final test was an end-to-end functional test from building 176 to Philadelphia International Airport via the LINCS lines. The Remote RCE was located at building 176 and the Control unit was at Philadelphia International Airport. This test simulated a scenario which would exist in the air traffic environment.

4.5.1.4.2 CN01 - Separate Receiver and Transmitter Site Configuration

The RCE Channel is required to meet this Configuration requirement as outlined in FAA-E-2885 (**shall**$_{12}$). This situation occurs when a Control facility operates a channel using transmitters/receivers located at separate sites and linked to the Control facility via separate Government provided transmission paths. The RCE channel consisted of one Control unit and two Remote units. The testbed was configured and the channel tested to ensure that a Control RCE could properly operate two Remote RCEs; one as a remote transmitter and the other as a remote receiver over two separate four wire transmission paths. Two frequencies were utilized for both Type B and C interfaces. The following automated tests were performed:

1. TM01-B/C - End-to-End System Timing Test for both Type B and C Interfaces.

2. TM01-MB - Receiver Mute/Unmute Timing (Type B only).

1. One mating connector for each connector on the chassis (**shall**$_{156}$).

2. All connectors mechanically keyed (**shall**$_{157}$).

3. All electrically energized power connections are female (**shall**$_{158}$).

4. All connectors on cables are mechanically retained in place when connected (**shall**$_{159}$).

5. All cable connectors contain strain relief (**shall**$_{160}$).

4.5.1.3.5 MC04 - Protective Covers Inspection

Inspected to verify **shall**$_{161}$, power busses, terminal blocks lugs or other outer power junctions to ensure that they had protective covers to prevent inadvertent contact. Labels were also required to warn of shock hazards.

4.5.1.3.6 MN03 - Voice Access Jacks

Test of the operation and location of the voice access jacks on the RCE. The test consisted of inspecting the unit to ensure it had all of the voice access jacks required by the specification. The RCE specification requires that voice access jacks **shall**$_{77}$ be provided and **should**$_{14}$ be on the RCE front panel at all control facilities and remote sites. Jacks **shall**$_{78}$ be provided for line, monitor, and drop throughputs for both send and receive audio and four-wire transmission paths.

4.5.1.3.7 EI02-SA - Telephone Line Receive/Transmit Separate Adjust

Test verified each RCE unit had the required telephone receive/transmit separate adjustments. The RCE **shall**$_{108}$ provide separate means to adjust the telephone line transmit level for the telephone line receive level. The RCE equipment provides no user accessible manual adjustments on the equipment. All level adjustments were accomplished via either the MDT or CMT.

4.5.1.4 Miscellaneous Tests

4.5.1.4.1 LN01 - Leased Interfacility NAS Communications System (LINCS)

The LINCS configuration consists of a VG6 transmission path with a holding tone of 3250 ± 50 Hz at about a -30 dBm level. LINCS testing consisted of a series of test configurations with testing done in the RCE lab, at building 176, and PHL as follows:

Test verified the RCE equipment responded to the following for four transmission path anomalies:

Loss of Transmission Path Tests (AUTO)

1. Complete Loss of Transmission Path (**shall**$_{32}$, **shall**$_{33}$, **shall**$_{69}$, and **shall**$_{70}$) - Verified release of PTT and Confirmation signals (**shall**$_{32}$ and **shall**$_{33}$) in case of loss of transmission path (**shall**$_{69}$ - three seconds).

2. Loss of Primary Transmission Path - Verified ability of RCE equipment to detect loss of transmission path (**should**$_{6}$), switch to an alternate path (Primary or Backup) (**should**$_{7}$) within three seconds (**shall**$_{69}$), and within three seconds of re-establishment of end-to-end communications automatically adopt (**shoulds**$_{8\text{-}10}$) the state of the VSCE.

Recovery from Transmission Path Loss Tests (AUTO)

3. Restoration of Previous State (**shoulds**$_{8\text{-}10}$). Verified ability of RCE equipment to automatically adopt (**shoulds**$_{8\text{-}10}$) the state of the VSCE within three seconds of (re-)establishment of end-to-end communications.

Manual Transmission Path Selection

4. Verified RCE had capability to manually switch between the primary and backup transmission paths (**should**$_{11}$).

4.5.1.4.5 BI01 - Burn-In Testing

The RCE Channel is required to meet the Reliability requirements as outlined in FAA-E-2885 for **shall**$_{119}$ and **should**$_{24}$. The purpose of this test was to ensure that an RCE channel can consistently and properly function over an extended period of time. The Single Channel Operation (SC01) test was executed extensively for this test. The SC01 test is described in Section 4.5.1.1.15 of this report.

4.5.1.5 CT01 - Certifications

Analysis of Vendor Certification was performed to verify specification compliance. The requirements listed in CT01 were previously reviewed and analyzed by ANC-700 during the DSRCE Operational Capabilities Test (OCT). These items were re-evaluated for accuracy and completeness.

4.5.2 Phase 2 - Radio Communication Link

4.5.2.1 RC01 - Nominal RCL

Test of RCE communications through an RCL circuit. Timing, level and single channel Automated Testbed tests were executed. The Nominal RCL Test consisted of replacing the Telephone Simulator, TAS 1200 Series II, with an actual Radio Communication (Microwave) Link. With the RCL acting as Telco provider, four tests from Phase 1 OT&E were performed to verify the suitability of integrating the RCE equipment with NAS RCL equipment. The tests consisted of TM01 - System Timing Measurements, LM01 - Level Measurements, SC01 - Single Channel Operation, and TELCO_XX - Voice path level measurements. Tests are described in Sections 4.5.1.1.7, 4.5.1.1.8, 4.5.1.1.9 and 4.5.1.1.13.

4.5.2.2 RC02 - Degradation using RCL

Test of the RCE communications through an RCL circuit with the introduction of reduced signal strength and noise. The Degraded RCL Test consisted of two parts. The first test series (RCL -39 dB Test) consisted of conducting RCL (Nominal) with the microwave receiver signal strength attenuated 39 dB. With the signal down 39 dB, the receiver was just 1 dB above the threshold for switchover. The second test series (the RCL Noise Test) consisted of conducting RCL (Nominal) with Noise injected into the microwave receiver signal. The Noise level injected for the receiver was just above the threshold for switchover.

4.5.2.3 RC03 - Low Density RCL (LDRCL)

Test of the RCE communications through an LDRCL circuit. Timing, level and single channel Automated Testbed tests were executed as in RC01. The Low Density RCL Test was conducted in conjunction with the RCL Noise (RC02) test. The LDRCL test consisted of providing a telephone path across an LDRCL circuit. The RC02 (Noise) test circuit was extended to include the LDRCL circuit.

This test verified that the RCE equipment could operate under a degraded RCL path and across an LDRCL circuit simultaneously.

4.5.3 Phase 3 - Radio Transmitter/Receiver Interface

4.5.3.1 RM01 - Motorola Radio Units, PTT Keying

The RCE Channel is required to meet the interface requirements at the Remote interface as outlined in Appendix B of FAA-E-2885 for **shall**$_{112}$. The purpose of this test was to ensure that the RCE could apply and release a PTT signal to Motorola Radio Transmitters. An RCE channel was configured with the Remote interface connected to four Motorola CM-200 Radio Transmitters. Front Panel commands were issued from the Control RCE unit and the following data was recorded for both frequencies of Main/Standby PTTs.

1. Front Panel LED status on both RCE Units and the Radio Transmitters.

2. Voltage measurements at the RCE interface while keying and unkeying the units.

A multimeter was utilized for the voltage measurements. CSTI's operating parameters for the RCE Channel were configured via an MDT. Configuration #1 values were used, except Modem Level was set to -19 dBm instead of -28 dBm.

4.5.3.2 RM02 - Motorola Radio units, Audio Tone/Modulation/RF Power

The RCE Channel is required to meet the interface requirements at the Remote interface as outlined in Appendix B of FAA-E-2885 for **shall**$_{112}$. An RCE channel was configured with the Remote interface connected to four Motorola CM-200 Radio Transmitters and four Motorola CM-200 Radio Receivers. This test consisted of three parts.

1. Baseline characterization of a single RCE Channel in both the uplink and downlink directions.

2. Quantitative measurements of the transmitter's associated RF Power, Percentage of Distortion, and Percent of Modulation while operating with a single RCE Channel.

3. Quantitative measurements of the RCE Channel's Audio Level and Percentage of Distortion for both its input and output in the downlink direction with an RF signal applied to the Receiver's input.

Front Panel commands were issued from the Control RCE unit and the above parameters were measured utilizing the HP 8920A RF Communications Test Set. The HP 8920A RF Communications Test Set was also used to provide the necessary Audio and RF signals for these tests. Configuration #1 operating parameters for the RCE Channel were used, except for the following:

Parameter	Value
VSCE To Control RCE Level	-5, +1, and -11 dBm at 300, 1000, and 2400 Hz
Receiver To Remote RCE	0 dBm at 300, 1000, and 2400 Hz

The above tests were performed for all four transmitters/receivers.

4.5.3.3 RM03 - Motorola Radio Units (CM-200), Power Configurations

Testing consisted of repeating the PTT Keying (RM01) and Audio Tone/Modulation/RF Power (RM02) tests with the Remote RCE unit operating at 24 VDC instead of 120 VAC at 60 Hz. Refer to the previous two sections for a detailed explanation.

4.5.3.4 RI01- ITT Ground Remote Receiving (AN/GRR) and Ground Remote Transmitter (AN/GRT) Units, PTT Keying

The RCE Channel is required to meet the interface requirements at the Remote interface as outlined in Appendix B of FAA-E-2885 for **shall**$_{112}$. The purpose of this test was to ensure that the RCE could apply and release a PTT signal to the ITT Radio Transmitters. An RCE channel was configured with the Remote interface connected to four ITT T-1108(V) 4/GRT-21(V) Radio Transmitters. Front Panel commands were issued from the Control RCE unit and the following data were recorded for both frequencies of Main/Standby PTTs.

1. Front Panel LED status on both RCE Units and the Radio Transmitters.

2. Voltage measurements at the RCE interface while keying and unkeying the units.

A multimeter was utilized for the voltage measurements. CSTI's operating parameters for the RCE Channel were configured via an MDT. Configuration #1 values were used, except Modem Level was set to -19 dBm instead of -28 dBm.

4.5.3.5 RI02 - ITT Ground Remote Receiving (AN/GRR) and Ground Remote Transmitter (AN/GRT) Units, Audio Tone/Modulation/RF Power

The RCE Channel is required to meet the interface requirements at the Remote interface as outlined in Appendix B of FAA-E-2885 for **shall**$_{112}$. An RCE channel was configured with the Remote interface connected to four ITT T-1108(V) 4/GRT-21(V) Radio Transmitters and four ITT AN/GRR-23(V)10 Radio Receivers. This test consisted of three parts.

1. Baseline characterization of a single RCE Channel in both the uplink and downlink directions.

2. Quantitative measurements of the transmitter's associated RF Power, Percentage Distortion, and Percent of Modulation while operating with a single RCE Channel.

3. Quantitative measurements of the RCE Channel's Audio Level and Percentage of Distortion for both its input and output in the downlink direction with an RF signal applied to the Receiver's input.

Front Panel commands were issued from the Control RCE unit and the above parameters were measured utilizing the HP 8920A RF Communications Test Set. The HP 8920A RF Communications Test Set was also used to provide the necessary Audio and RF signals. Configuration #1 operating parameters for the RCE Channel were used except for the following:

Parameter	Value
VSCE To Control RCE Level	-5, +1, and -11 dBm at 300, 1000, and 2400 Hz

4.6 Data Collection and Analysis

The data acquired from the Automated Testbed was stored in text files located in the testbed controller PC. These data files were processed using a Microsoft Excel based data reduction program. This program performed averaging, Min/Max/Mean analysis, and sorting of the data. The reduced data were stored in an Excel spreadsheet. The reduced data was utilized to construct tables and charts used to determine the overall performance of the RCE.

The data acquired during Manual testing were analyzed and tables were provided, when necessary, in the Results and Discussion (Section 5.0) to support the conclusions of each test. Additional test data was collected from the Transmitter/Receiver site, the RCL/LDRCL/RCR, and from the various switching interfaces. Checksheets were used to collect data from the manual tests.

4.5.7.5 Maintenance Data Terminal (MDT) Compatibility

The MDT testing consisted of verifying that the MDT Software **shall**$_{75}$ operate on a microcomputer system as identified by **shall**$_{76}$ and Appendix C of FAA-E-2885. The MDT testing also consisted of operating and verifying the usability and functionally of the MDT software. All user selectable functions accessible via the MDT Software Menu were verified. Additionally, the Program Office provided MDT (GFE Hardware) was verified.

4.5.7.6 Central Maintenance Terminal (CMT) Compatibility

The CMT testing consisted of verifying the delivered CMT hardware and software system as identified by **should**$_{12}$ and Appendix D of the FAA-E-2885 specification. The CMT testing also included operation and verification of the usability and functionally of the CMT software. All user selectable functions accessible via the CMT Software menu were verified. The CMT Maintenance Processor System (MPS) interface capability was not verified as it was not incorporated yet. The MPS capability is a Planned Product Improvement (PPI).

The Centralized Maintenance System (CMS) is located at the Control site and provides workstation monitoring, logging of events, and MDT capabilities for multiple RCE channels. The CMT is used to modify the software configuration of the various RCE channels, which includes setting up the configuration of the VSCE interface and/or the audio levels for each RCE channel. The CMS includes the CMT and one or more Communication Servers. The hardware is a 80486 based Intel CPU with the software consisting of a Windows based user interface. The CMT together with the MDT are the primary tools for setup and configuration of the RCE equipment.

4.5.7.7 RCE/BUEC Interface Electromagnetic Interface (EMI)

The purpose of the test was to determine if a Remote RCE had any effects on Receiver Sensitivity due to EMI while operating within a BUEC enclosure. A single RCE channel was configured at building 176 with the Remote Unit placed within a BUEC enclosure, located about 40 feet from the building. The BUEC enclosure consisted of a weatherproof National Electrical Manufacturers Association (NEMA) box. The NEMA box contained a pair of Motorola CM-200 TX/RX for both the VHF and UHF frequencies, a Remote RCE, and a 24 VDC power source. Noise studies within the BUEC enclosure were conducted for both the VHF and UHF frequencies together with Receiver Sensitivity measurements.

4.5.7.8 Non-Linear Gain of RCE Audio Path

During installation of RCE units at Southern Cal TRACON (SCT), SCT personnel determined the gain on the uplink and downlink audio paths of the R-DVC remained linear until the output level exceeded approximately 1.2 dBm. Any increment of the input at this point caused the output to increase approximately 1.4 dBm beyond the expected gain. The RCE test team duplicated this problem under laboratory conditions.

4.5.7 Unscripted/Characterization Tests

4.5.7.1 Small Tower Voice Switch (STVS)

The STVS is an integrated Air/Ground and Ground/Ground voice switching system. The STVS provides for the selection, interconnection, and activation of communication paths between the Air Traffic Control (ATC) Position and other ATC facilities including local and remote radios. The system is specially designed for low activity operations and can accommodate up to 4 ATC positions and 12 radio/telephone channels. A system level functional test was performed. The Control RCE was connected to the Telephone interfaces of the STVS. This was a Type C interface set up for the Quad PTT/Eight Port Audio Configuration. Refer to Section 3.2.8 for additional information about the different audio options.

4.5.7.2 Rapid Deployment Voice Switch (RDVS)

The RDVS is a program for an ICSS type switching system presently being developed by Litton/AMECON. The RDVS's characteristics are similar to the ICSS. A system level functional test of the RCE interfaced with the RDVS was performed. The RCE was configured as a Type C interface with the Quad PTT/Eight Port Audio option. Refer to Sections 3.2.7 and 3.2.8 for additional information about the different PTT and audio options. Audio gains were set at 0 dBm transmit and 0 dBm receive (RDVS preset). Additional testing was conducted at audio gains of -5 dBm transmit and -17 dBm receive.

4.5.7.3 End-to-End Frequency Characterization of an RCE Channel (Uplink)

The voice level provided to the radio transmitter in the uplink direction at the Remote RCE interface was plotted over a frequency input range of 300 to 3000 Hz. A single RCE channel was configured with the Telco interface set at a 0 dBm level. An HP 8920A RF Communications Test Set was utilized to provide three input levels (1 dBm, -5 dBm, and -11 dBm) with a 600 ohm impedance source to the RCE VSCE interface. The input frequency was incremented by 10 Hz steps while maintaining a constant input level. Output data at a 600 ohm load was obtained for each of the 10 Hz steps. The data was plotted and analyzed for each of the three input levels.

4.5.7.4 Frequency Characterization of the RCE Modem

The modem data level provided to the Telco interface in the uplink direction at the RCE Control unit was plotted over a frequency input range of 1471 Hz to 4471 Hz. An HP 8568B Spectrum Analyzer was utilized to perform a 3000 Hz frequency sweep with a center frequency of 3000 Hz. The data was plotted and analyzed.

Receiver To Remote RCE	0 dBm at 300, 1000, and 2400 Hz

The above tests were performed for all four transmitters/receivers.

4.5.3.6 RI03 - ITT Ground Remote Receiving (AN/GRR) and Ground Remote Transmitter (AN/GRT) Units, Power Configurations

This test consisted of repeating the PTT Keying (RI01) and Audio Tone/Modulation/RF Power (RI02) tests with the remote RCE unit operating at 24 VDC instead of 120 VAC at 60 Hz. The HP 6643A power supply provided the necessary voltage. Refer to the previous two sections for a detailed explanation.

4.5.4 Phase 4 - Voice Switching and Control Equipment

4.5.4.1 VS01 - VSCE

Testing consisted of verifying end-to-end functional performance of the RCE integrated with the VSCE; specifically ICSS Type IIIa, WECO 4 channel, and VSCS A/G communications equipment. The primary emphasis was to operationally test the A/G capabilities of the RCE with existing VSCE equipment installed in the VSCE laboratory. The Control RCE and Remote RCE were cross patched back-to-back for Telco communications. The radio interface was simulated using ERCE (simulates radio transmitters/receivers).

4.5.5 Phase 5a - Integrated Air/Ground Test, FAA Technical Center

4.5.5.1 VS02 - VSCE

Testing consisted of verifying end-to-end operational performance of the RCE integrated with the VSCE, Telco network, and A/G radios. The VSCE consisted of ICSS Type IIIa, WECO 4 channel, and VSCS equipment. The Telco network consisted of the TAS network simulator and RCL. The A/G radios consisted of ITT transmitters/receivers. Aircraft communications were simulated with handheld transceivers.

4.5.6 Phase 5b - Integrated Air/Ground Test, Jacksonville ARTCC

4.5.6.1 VS03 - Integrated Air/Ground Operational Test

Testing consisted of verifying end-to-end operational performance of the RCE at the Jacksonville ARTCC. The RCE was integrated with the WECO Type B VSCE, MCI/LINCS Telco network, and A/G ITT radios. Aircraft communications were conducted with live air traffic through the Jacksonville sector area.

5.0 RESULTS AND DISCUSSION

5.1 Phase 1 - RCE Testbed

5.1.1 Pass/Fail Data Sheets

Phase 1 was subdivided into five categories related to the type of test being performed. A separate Pass/Fail Data Sheet for each category within Phase 1 was maintained. These Data Sheet checklists are contained in the following section of this document:

- Automated Tests - See Checklist in Section 5.1.2.1
- Manual Tests - See Checklist in Section 5.1.2.2
- Inspections - See Checklist in Section 5.1.2.3
- Miscellaneous Tests - See Checklist in Section 5.1.2.4
- Certifications - See Checklist in Section 5.1.2.5

5.1.2 Summary Descriptions/Results

This section is subdivided into each category as described above. Within each of the five categories, every test is listed and includes the test name and label, test procedures reference, description of the test, and a quick synopsis of the results. The subsections are as follows:

5.1.2.1	Automated Tests - Subsections 5.1.2.1.1 through 5.1.2.1.17
5.1.2.2	Manual Tests - Subsections 5.1.2.2.1 through 5.1.2.2.17
5.1.2.3	Inspections - Subsections 5.1.2.3.1 through 5.1.2.3.7
5.1.2.4	Miscellaneous Tests - Subsections 5.1.2.4.1 through 5.1.2.4.5
5.1.2.5	Certifications

5.1.2.1 Automated Tests

Checklist for Phase 1: RCE Testbed Automated Tests

TEST - Label and Description		Config. #1 (-13 dBm) P/F	PTR	Config. #2 (-8 dBm) P/F	PTR	Config. #3 (0 dBm) P/F	PTR	Config. #4 (-8 dBm/Default) P/F	PTR
TM01-MB	Receiver Mute/Unmute Timing	F	007	P		P		F	065
LM01-MB	Receiver Mute/Unmute Level	P		P		P		P	
EI02-DL	VG6 Operation with Delay	F	005	P		P		P	
EI02-IN	VG6 Operation with Impulse Noise	F	007	P		P		P	
VH02	Noise	P		P		P		P	
VH03	Crosstalk	P		P		P		P	
TM01-B	End-to-End System Timing, Interface B	F	004, 005, 006	F	005	N/A		P	
TM01-C	End-to-End System Timing, Interface C	F	004, 005, 006	F	005	N/A		P	
LM01-B	Control Signal Levels, Interface B	P		P		P		P	
LM01-C	Control Signal Levels, Interface C	P		P		N/A		P	
SC01	Channel Operation, Interface B	P		P		P		P	
SC01	Channel Operation, Interface C	P		P		N/A		N/A	
EI01-B	VSCE Voice Interface, Interface B	P		N/A		N/A		N/A	
EI01-C	VSCE Voice Interface, Interface C	P		N/A		N/A		N/A	
EI02-IM	Telephone Line Impedance	P		N/A		N/A		N/A	
EI02-IS	Telephone Line Isolation	P		N/A		N/A		N/A	
EI02-VG	VG6 Operation	F	004, 005	P		P		P	
EI03	Solid State Radio Equipment Interface	P		N/A		N/A		N/A	
CN03	Single Channel Configuration	P	004, 005, 007					P	
EI02-TL	Telephone Line Transmit Adjust	P	018	N/A		N/A		N/A	
EI02-RL	Telephone Line Receive Adjust	P		N/A		N/A		N/A	

5.1.2.1.1 TM01-MB - Receiver Mute/Unmute Timing

Test Procedures Reference: A1-1

The results for TM01-MB testing for Configuration's #1, #2, #3, and #4 were as follows:

Configuration #1 - The Mute Timing test was conducted on December 7, 1994 with the results stored in data file C7102.R01. There were eight failures due to the RCE not achieving data modem lock. These failures are documented in PTR-007. The RCE equipment was returned to CSTI from January 6, 1995 to February 13, 1995 during which time modifications were made to correct some of the anomalies/problems. Configuration #1 mute timing data plots are in Appendix A, pages A-1-1 to A-1-2.

Configuration #2 - The Mute Timing test was conducted on February 22, 1995 with the results stored in data file C7102.R03. There were no errors, failures or anomalies during the test. Configuration #2 mute timing data plots are in Appendix A, pages A-1-3 to A-1-4.

Configuration #3 - The Mute Timing test was conducted on March 2, 1995 with the results stored in data file O7102.R01. There were no errors, failures or anomalies during the test. Configuration #3 mute timing data plots are in Appendix A, pages A-1-5 to A-1-6.

Configuration #4 - The Mute Timing test was conducted on August 24, 1995 with the results stored in data file P7102.R01. Further testing and analysis revealed unrelated timing failures not evident in previous versions of the RCE, indicating problems in the Revision D firmware. This was documented in PTR-065. Additional timing data were collected to verify the timing anomalies, but are not presented in this document. Configuration #4 mute timing data plots are in Appendix A, pages A-1-7 to A-1-8.

The collected mute/unmute timing measurement data for Configurations #1, #2, #3, and #4 are summarized in the following tables. All times are in msec.

TEST CASE: TM01-MB (MUTING TIMING MEASUREMENTS FOR TYPE B INTERFACE)

Time in msec	Config: -13 dBm			Config: -8 dBm		
Description	Min	Max	Mean	Min	Max	Mean
MUTE - M RX M/U F1 (C TO R)	73	93	84	77	93	84
MUTE - STBY RX M/U F1 (C TO R)	79	95	86	79	96	86
MUTE - M RX M/U F2 (C TO R)	73	96	87	75	97	86
MUTE - STBY RX M/U F2 (C TO R)	72	96	86	78	95	86
UNMUTE - M RX M/U F1 (C TO R)	75	98	86	78	94	85
UNMUTE - STBY RX M/U F1 (C TO R)	78	98	88	79	99	87
UNMUTE - M RX M/U F2 (C TO R)	78	99	88	73	94	85
UNMUTE - STBY RX M/U F2 (C TO R)	75	98	86	78	95	87
MUTE - M RX M/U CONF. F1 (R TO C)	28	47	35	28	94	36
MUTE - STBY RX M/U CONF. F1 (R TO C)	28	47	38	31	47	39
MUTE - M RX M/U CONF. F2 (R TO C)	30	47	39	29	45	37

TEST CASE: TM01-MB (MUTING TIMING MEASUREMENTS FOR TYPE B INTERFACE)

Time in msec	Config: -13 dBm			Config: -8 dBm		
Description	Min	Max	Mean	Min	Max	Mean
MUTE - STBY RX M/U CONF. F2 (R TO C)	28	46	38	28	47	37
UNMUTE - M RX M/U CONF. F1 (R TO C)	26	45	36	28	48	39
UNMUTE - STBY RX M/U CONF. F1 (R TO C)	31	41	36	30	66	39
UNMUTE - M RX M/U CONF. F2 (R TO C)	26	41	34	28	45	37
UNMUTE - STBY RX M/U CONF. F2 (R TO C)	26	40	32	32	47	40

TEST CASE: TM01-MB (MUTING TIMING MEASUREMENTS FOR TYPE B INTERFACE)

Time in msec	Config: 0 dBm			Config: -8 dBm/Default		
Signal Under Test	Min	Max	Mean	Min	Max	Mean
MUTE - M RX M/U F1 (C TO R)	80	96	88	79	99	87
MUTE - STBY RX M/U F1 (C TO R)	78	95	85	80	97	88
MUTE - M RX M/U F2 (C TO R)	73	96	86	78	97	88
MUTE - STBY RX M/U F2 (C TO R)	78	94	86	79	96	87
UNMUTE - M RX M/U F1 (C TO R)	78	99	86	79	99	89
UNMUTE - STBY RX M/U F1 (C TO R)	79	98	86	79	99	90
UNMUTE - M RX M/U F2 (C TO R)	75	97	85	78	99	88
UNMUTE - STBY RX M/U F2 (C TO R)	79	98	87	78	102	87
MUTE - M RX M/U CONF. F1 (R TO C)	29	45	38	28	52	37
MUTE - STBY RX M/U CONF. F1 (R TO C)	28	47	38	30	47	38
MUTE - M RX M/U CONF. F2 (R TO C)	29	45	38	29	49	37
MUTE - STBY RX M/U CONF. F2 (R TO C)	28	47	37	28	45	35
UNMUTE - M RX M/U CONF. F1 (R TO C)	26	45	36	31	48	39
UNMUTE - STBY RX M/U CONF. F1 (R TO C)	30	46	37	26	46	38
UNMUTE - M RX M/U CONF. F2 (R TO C)	26	45	35	26	46	36
UNMUTE - STBY RX M/U CONF. F2 (R TO C)	31	46	38	26	45	35

5.1.2.1.2 LM01-MB - Receiver Mute/Unmute Level

Test Procedures Reference: A1-2

The results for LM01-MB testing for Configuration's #1, #2, #3, and #4 were as follows: There were no anomalies detected. The following tables provide a summary of the results of Mute Level testing.

Configuration #1 Test: -13 dBm Telco

Signal Under Test	Mute Level (dBm) Min	Max	Mean	Unmute Level (dBm) Min	Max	Mean
Main Receiver Frequency 1	50.15	50.54	50.33	17.26	17.29	17.27
Stby Receiver Frequency 1	49.95	50.67	50.27	17.19	17.23	17.21
Main Receiver Frequency 2	49.97	50.82	50.77	17.08	17.11	17.09
Stby Receiver Frequency 2	49.96	50.77	50.46	17.13	17.18	17.16

Configuration #2 Test: -8 dBm Telco

Signal Under Test	Mute Level (dBm) Min	Max	Mean	Unmute Level (dBm) Min	Max	Mean
Main Receiver Frequency 1	49.97	50.88	50.25	17.42	17.45	17.44
Stby Receiver Frequency 1	49.97	50.41	50.20	17.36	17.40	17.38
Main Receiver Frequency 2	50.07	50.58	50.31	17.24	17.26	17.25
Stby Receiver Frequency 2	50.21	50.68	50.47	17.31	17.34	17.32

Configuration #3 Test: 0 dBm Telco

Signal Under Test	Mute Level (dBm) Min	Max	Mean	Unmute Level (dBm) Min	Max	Mean
Main Receiver Frequency 1	50.20	51.22	50.76	16.80	16.83	16.82
Stby Receiver Frequency 1	50.82	51.26	50.98	16.71	16.76	16.73
Main Receiver Frequency 2	50.62	51.24	50.89	16.60	16.62	16.61
Stby Receiver Frequency 2	50.84	51.68	51.15	16.67	16.70	16.69

Configuration #4 Test: -8 dBm/Default Telco

Signal Under Test	Mute Level (dBm) Min	Max	Mean	Unmute Level (dBm) Min	Max	Mean
Main Receiver Frequency 1	53.12	53.49	53.30	16.58	16.61	16.59
Stby Receiver Frequency 1	53.10	53.92	53.49	16.51	16.55	16.53
Main Receiver Frequency 2	53.41	53.67	53.51	16.50	16.54	16.52
Stby Receiver Frequency 2	53.52	53.95	53.71	16.59	16.61	16.60

5.1.2.1.3 EI02-DL - VG6 Operation with Delay

Test Procedures Reference: A1-3

The results for EI02-DL testing for Configuration's #1, #2, #3, and #4 were as follows: Note: No discernible trends were discovered from the data charts, therefore, only test data for highest VG6 degradation (Frequency Shift of +1 Hz) were plotted for Configuration #2. Refer to Appendix A, pages A-2-1 to A-2-7.

Configuration #1 - The VG6 operational testing with delay was conducted on December 9, 1994 for the Type B interface with the results stored in data files C11520.R01, C11521.R01, and C11522.R01. Type C interface testing was not performed. There were failures within each degradation subtest for all three delay settings. Failures were due to a no signal received condition documented in PTR-005. PTR-005 was closed after the cause of the failure was traced to the Automated Testbed's IBASIC/Windows software. Configuration #1 test data are listed in Appendix B, pages B-1-1 to B-1-9.

Configuration #2 - The VG6 operational testing with delay was conducted on March 29, 1995 for the Type B interface with the results stored in data files C11520.R03, C11521.R03, and C11522.R03. Type C interface testing was not performed. There were no errors, failures or anomalies during the test. Configuration #2 test data are listed in Appendix B, pages B-1-10 to B-1-18.

Configuration #3 - The VG6 operational testing with delay was conducted March 3, 1995 for the Type B interface with the results stored in data files O11520.R02, O11521.R02, and O11522.R02. Type C interface testing was not performed. There were no errors, failures or anomalies during the test. Configuration #3 test data are listed in Appendix B, pages B-1-19 to B-1-27.

Configuration #4 - Refer to EI02-VG test results (Section 5.1.2.1.13).

5.1.2.1.4 EI02-IN - VG6 Operation with Impulse Noise

Test Procedures Reference: A1-4

The results for EI02-IN testing for Configuration's #1, #2, ,#3, and #4 were as follows: Note: No discernible trends were discovered from the data charts, therefore, only test data for highest VG6 degradation (Frequency Shift of +1 Hz) were plotted for Configuration #2. Refer to Appendix A, pages A-3-1 to A-3-7.

Configuration #1 - The VG6 operational testing with impulse noise was conducted on December 28, 1994 for the Type B interface with the results stored in data files C116200.R01, C116201.R01, C116202.R01, C116210.R01, C116211.R01, and C116212.R01. Type C interface testing was not performed. There were failures within each degradation subtest for all eight impulse noise settings. Failures were due to the Main/Standby selection

timing exceeding the maximum value. The failures were documented in PTR-004. PTR-004 was later closed due to testing methodology changes. Multiple failures within three of the impulse noise settings were due to the RCE not achieving data modem lock. These failures were documented in PTR-007. Configuration #1 test data are listed in Appendix B, pages B-2-1 to B-2-18.

Configuration #2 - The VG6 operational testing with impulse noise was conducted on March 28, 1995 for the Type B interface with the results stored in data files C116200.R01, C116201.R01, C116202.R01, C116210.R01, C116211.R01, and C116212.R01. Type C interface testing was not performed. There were no errors, failures or anomalies during the test. Configuration #2 test data are listed in Appendix B, pages B-2-19 to B-2-36.

Configuration #3 - The VG6 operational testing with impulse noise was conducted on March 6, 1995 for the Type B interface with the results stored in data files O116200.R01, O116201.R01, O116202.R01, O116210.R01, O116211.R01, and O116212.R01. Type C interface testing was not performed. There were no errors, failures or anomalies during the test. Configuration #3 test data are listed in Appendix B, pages B-2-37 to B-2-54.

Configuration #4 - Refer to EI02-VG test results (Section 5.1.2.1.13).

5.1.2.1.5 VH02 - Noise

Test Procedures Reference: A1-5

The results for VH02 testing for Configuration's #1, #2, #3, and #4 are provided in the following tables. There were no errors, failures or anomalies during the test. The tables are a summary of the results of Noise and Impulse Noise testing at 13 dBm, -8 dBm, 0 dBm, and -8 dBm/Default Telco levels.

Configuration:	-13 dBm		-8 dBm		0 dBm		-8 dBm/Default	
Signal Path	Noise	Impulse Noise	Noise	Impulse Noise	Noise	Impulse Noise	Noise	Impulse Noise
Main TX Freq 1	19.33	0	19.71	0	20.02	0	13.06	0
Main RX Freq 1	19.64	0	19.90	0	19.89	0	13.64	0
Stby TX Freq 1	19.28	0	19.27	0	19.92	0	13.27	0
Stby RX Freq 1	19.66	0	19.64	0	19.80	0	13.73	0
Main TX Freq 2	19.05	0	19.47	0	19.46	0	12.82	0
Main RX Freq 2	19.61	0	20.00	0	19.74	0	13.09	0
Stby TX Freq 2	19.19	0	19.45	0	19.66	0	12.75	0
Stby RX Freq 2	19.67	0	19.88	0	20.08	0	12.99	0

Note: Noise values are in dBrnC and Impulse Noise values are counts of the number of occurrences.

5.1.2.1.6 VH03 - Crosstalk

Test Procedures Reference: A1-6

The results for VH03 testing for Configuration's #1, #2, #3, and #4 are provided in the following table. There were no errors, failures or anomalies during the test. The following table provides a summary of the results of Crosstalk testing at -13 dBm, -8 dBm, 0 dBm, and -8 dBm/Default Telco levels.

Quad PTT/Audio Configuration

		Telco Level			
Signal Path Under Test.	Path Monitored	-13 dBm Level/dB	-8 dBm Level/dB	0 dBm Level/dB	-8 dBm/Default Level/dB
Main TX F1	Main RX F1	66.7	66.2	54.6	70.2
	Stby RX F1	66.5	66.2	54.4	70.2
	Main RX F2	66.5	66.4	54.6	71.6
	Stby RX F2	66.7	66.2	54.3	71.5
Stby TX F1	Main RX F1	66.6	66.1	54.3	70.1
	Stby RX F1	66.6	66.1	54.3	70.1
	Main RX F2	66.8	66.5	54.4	71.5
	Stby RX F2	66.8	66.4	54.6	71.5
Main TX F2	Main RX F1	66.7	66.3	54.6	70.2
	Stby RX F1	66.5	66.2	54.3	70.1
	Main RX F2	66.7	66.3	54.6	71.7
	Stby RX F2	66.7	66.2	54.4	71.6
Stby TX F2	Main RX F1	66.6	66.3	54.2	70.1
	Stby RX F1	66.5	66.1	54.5	70.1
	Main RX F2	66.7	66.5	54.5	71.6
	Stby RX F2	66.6	66.3	54.6	71.6
Main RX F1	Main TX F1	67.0	66.7	66.6	72.3
	Stby TX F1	67.1	67.7	66.4	72.1
	Main TX F2	67.7	66.9	66.7	72.1
	Stby TX F2	67.4	66.8	66.6	72.2
Stby RX F1	Main TX F1	67.0	66.6	66.4	72.2
	Stby TX F1	67.0	66.4	66.4	72.0
	Main TX F2	67.5	66.7	66.7	72.1
	Stby TX F2	67.3	66.8	66.7	72.2

Quad PTT/Audio Configuration

Signal Path Under Test.	Path Monitored	Telco Level -13 dBm Level/dB	-8 dBm Level/dB	0 dBm Level/dB	-8 dBm/Default Level/dB
Main RX F2	Main TX F1	67.0	66.7	66.4	72.1
	Stby TX F1	66.9	66.7	66.6	72.0
	Main TX F2	67.4	66.8	66.8	72.1
	Stby TX F2	67.4	66.8	66.5	72.1
Stby RX F1	Main TX F1	66.7	66.7	66.6	72.1
	Stby TX F1	67.0	66.6	66.4	72.1
	Main TX F2	67.3	66.8	66.8	72.1
	Stby TX F2	67.4	66.7	66.8	72.1

5.1.2.1.7 TM01-B/C - End-to-End System Timing

Test Procedures Reference: A1-7

The results for TM01-B/C testing for Configuration's #1, #2, #3, and #4 were the following:

Configuration #1 - The end-to-end timing test for the Type B interface, TM01-B, was conducted on December 8, 1994 with the results stored in data file C3002.R01. The end-to-end timing test for the Type C interface, TM01-C, was conducted on December 6, 1994 with the results stored in data file C5003.R01. Four combinations within each subtest failed due to the Main/Standby selection timing exceeding the maximum value. These failures were documented in PTR-004. PTR-004 was later closed due to testing methodology changes. There were also failures due to a no signal received condition. The failures were documented in PTR-005. PTR-005 was closed after the cause of the failures were traced to the Automated Testbed's IBASIC/Windows software. Configuration #1 timing data plots for Type B are in Appendix A, pages A-4-1 to A-4-4. Timing data plots for Type C are in Appendix A, pages A-4-5 to A-4-8.

Configuration #2 - The end-to-end timing test for the Type B interface, TM01-B, was conducted on February 22, 1995 with the results stored in data file C3002.R01. The end-to-end timing test for the Type C interface, TM01-C, was conducted on February 23, 1995 with the results stored in data file C5003.R01. An error occurred in both Type B and C tests, manifesting itself as a lack of trigger signal to the oscilloscope. Failure was documented in PTR-005. PTR-005 was closed after the cause of the failure was traced to the Automated Testbed's IBASIC/Windows software. There were no other anomalies/problems observed during these tests. Configuration #2 timing data plots for Type B are in Appendix A, pages A-4-9 to A-4-12. Timing data plots for Type C are in Appendix A, pages A-4-13 to A-4-16.

Configuration #3 - The end-to-end timing tests for this configuration were not conducted since the differences between Configuration #2 and #3 parameters only affect audio transmission through the RCE channel. These differences will not affect the timing measurements of the

control signals. Since no additional insight could be obtained, it was decided not to perform the end-to-end System Timing tests for this configuration.

Configuration #4 - The end-to-end timing test for the Type B interface, TM01-B, was conducted on August 25, 1995 with the results stored in data file P3002.R02. The end-to-end timing test for the Type C interface, TM01-C, was conducted on September 7, 1995 with the results stored in data file P5003.R01. There were no other anomalies/problems observed during these tests. Configuration #4 timing data plots for Type B are in Appendix A, pages A-4-17 to A-4-20. Timing data plots for Type C are in Appendix A, pages A-4-21 to A-4-24.

The collected timing measurement data is summarized in the following tables. All times are in msec.

TEST CASE: TM01-B (TIMING MEASUREMENTS FOR TYPE B INTERFACE)

Time in msec	Config: -13 dBm			Config: -8 dBm			Config: -8 dBm/Default		
Signal Under Test	Min	Max	Mean	Min	Max	Mean	Min	Max	Mean
PTT - M TX F1 KEY (C TO R)	56	74	64	55	77	66	56	72	65
PTT - STBY TX F1 KEY (C TO R)	55	73	65	56	74	65	56	84	66
PTT - M TX F2 KEY (C TO R)	56	74	65	54	74	64	57	74	67
PTT - STBY TX F2 KEY (C TO R)	55	74	65	56	72	64	56	72	64
PTT - M TX F1 REL. (C TO R)	55	74	64	56	76	65	55	74	65
PTT - STBY TX F1 REL. (C TO R)	56	72	64	58	73	66	56	73	65
PTT - M TX F2 REL. (C TO R)	57	74	66	56	71	64	57	73	66
PTT - STBY TX F2 REL. (C TO R)	54	71	64	55	74	66	57	74	66
PTT - M CONF. KEY F1 (R TO C)	80	93	86	82	98	89	80	99	90
PTT - M CONF. KEY F2 (R TO C)	83	99	92	80	97	88	80	104	90
PTT - STBY CONF. KEY F1 (R TO C)	80	99	88	80	120	91	81	99	90
PTT - STBY CONF. KEY F2 (R TO C)	80	99	89	83	103	91	81	100	89
PTT - M CONF. REL. F1 (R TO C)	52	64	57	51	66	58	51	67	58
PTT - M CONF. REL. F2 (R TO C)	52	69	62	50	66	59	51	69	59
PTT - STBY CONF. REL. F1 (R TO C)	52	68	61	51	67	58	51	68	60
PTT - STBY CONF. REL. F2 (R TO C)	52	63	57	50	102	58	52	69	59
M/S TX SEL F1 [STBY TO M] (C TO R)	56	77	68	60	76	67	59	82	68
M/S TX SEL F2 [STBY TO M] (C TO R)	59	76	68	58	78	68	61	77	68
M/S RX SEL F1 [STBY TO M] (C TO R)	115	134	123	61	83	69	60	80	67
M/S RX SEL F2 [STBY TO M] (C TO R)	110	134	122	58	78	68	61	78	69
M/S TX SEL F1 [M TO STBY] (C TO R)	51	73	63	56	72	62	55	74	63
M/S TX SEL F2 [M TO STBY] (C TO R)	54	73	63	53	72	64	55	71	63
M/S RX SEL F1 [M TO STBY] (C TO R)	111	139	126	54	73	64	54	73	63
M/S RX SEL F2 [M TO STBY] (C TO R)	113	136	126	51	74	63	56	75	63
M/S TX SEL CONF. F1 [STBY TO M] (R TO C)	36	48	43	34	53	45	38	53	46
M/S TX SEL CONF. F2 [STBY TO M] (R TO C)	36	48	43	35	53	46	36	54	46
M/S RX SEL CONF. F1 [STBY TO M] (R TO C)	37	48	43	37	53	46	36	58	45
M/S RX SEL CONF. F2 [STBY TO M] (R TO C)	36	48	43	36	52	45	36	58	46
M/S TX SEL CONF. F1 [M TO STBY] (R TO C)	53	69	64	51	70	63	51	74	63
M/S TX SEL CONF. F2 [M TO STBY] (R TO C)	53	69	64	51	109	63	51	70	61

TEST CASE: TM01-B (TIMING MEASUREMENTS FOR TYPE B INTERFACE)

Time in msec	Config: -13 dBm			Config: -8 dBm			Config: -8 dBm/Default		
Signal Under Test	Min	Max	Mean	Min	Max	Mean	Min	Max	Mean
M/S RX SEL CONF. F1 [M TO STBY] (R TO C)	53	69	64	53	83	61	53	79	63
M/S RX SEL CONF. F2 [M TO STBY] (R TO C)	53	69	64	52	83	61	51	70	61

TEST CASE: TM01-C (TIMING MEASUREMENTS FOR TYPE C INTERFACE)

Time in msec	Config: -13 dBm			Config: -8 dBm			Config: -8 dBm/Default		
Signal Under Test	Min	Max	Mean	Min	Max	Mean	Min	Max	Mean
PTT - M TX F1 KEY (C TO R)	56	75	66	57	72	65	57	72	65
PTT - STBY TX F1 KEY (C TO R)	57	75	66	59	75	67	58	73	66
PTT - M TX F2 KEY (C TO R)	56	74	66	58	72	65	58	77	67
PTT - STBY TX F2 KEY (C TO R)	57	77	67	55	75	65	58	75	67
PTT - M TX F1 REL. (C TO R)	55	74	65	51	73	63	56	73	64
PTT - STBY TX F1 REL. (C TO R)	55	73	65	58	73	66	56	75	64
PTT - M TX F2 REL. (C TO R)	56	75	66	52	70	63	57	73	66
PTT - STBY TX F2 REL. (C TO R)	55	72	64	58	73	67	56	74	64
PTT - M CONF. KEY F1 (R TO C)	81	92	85	84	98	90	81	100	89
PTT - M CONF. KEY F2 (R TO C)	82	98	90	84	98	89	83	101	89
PTT - STBY CONF. KEY F1 (R TO C)	81	92	84	84	98	88	81	100	88
PTT - STBY CONF. KEY F2 (R TO C)	82	93	85	85	101	90	81	100	89
PTT - M CONF. REL. F1 (R TO C)	52	63	55	52	71	60	51	70	60
PTT - M CONF. REL. F2 (R TO C)	52	68	60	54	70	60	54	69	59
PTT - STBY CONF. REL. F1 (R TO C)	54	66	57	55	70	59	52	69	57
PTT - STBY CONF. REL. F2 (R TO C)	50	65	57	51	66	57	52	67	58
M/S TX SEL F1 [STBY TO M] (C TO R)	59	78	69	60	78	69	60	83	69
M/S TX SEL F2 [STBY TO M] (C TO R)	60	78	68	55	75	65	59	85	68
M/S RX SEL F1 [STBY TO M] (C TO R)	110	137	127	60	76	67	59	79	68
M/S RX SEL F2 [STBY TO M] (C TO R)	111	134	124	60	78	69	60	87	68
M/S TX SEL F1 [M TO STBY] (C TO R)	56	74	64	57	71	63	55	75	65
M/S TX SEL F2 [M TO STBY] (C TO R)	53	72	63	55	73	65	55	73	64
M/S RX SEL F1 [M TO STBY] (C TO R)	113	139	124	54	70	62	55	73	63
M/S RX SEL F2 [M TO STBY] (C TO R)	114	139	127	55	72	63	55	74	64
M/S TX SEL CONF. F1 [STBY TO M] (R TO C)	37	50	42	37	51	43	38	54	46
M/S TX SEL CONF. F2 [STBY TO M] (R TO C)	34	50	43	35	55	44	38	55	45
M/S RX SEL CONF. F1 [STBY TO M] (R TO C)	34	50	43	37	52	45	38	54	45
M/S RX SEL CONF. F2 [STBY TO M] (R TO C)	36	52	45	36	50	43	38	59	44
M/S TX SEL CONF. F1 [M TO STBY] (R TO C)	51	69	62	55	69	61	54	70	62
M/S TX SEL CONF. F2 [M TO STBY] (R TO C)	51	69	58	53	68	60	53	70	61
M/S RX SEL CONF. F1 [M TO STBY] (R TO C)	52	69	56	55	83	63	53	79	62
M/S RX SEL CONF. F2 [M TO STBY] (R TO C)	53	64	58	54	68	59	53	69	60

5.1.2.1.8 LM01-B/C - Control Signal Levels

Test Procedures Reference: A1-8

The results for LM01-B/C testing for Configuration's #1, #2, #3, and #4 were the following:

Configuration #1 - The Control Signal level test for the Type B interface, LM01-B, was conducted on December 6, 1994 with the results stored in data file C4002.R01. The Control Signal level test for the Type C interface, LM01-C, was conducted on December 6, 1994 with the results stored in data file C6003.R01. There were no errors, failures or anomalies during either of these two tests.

Configuration #2 - The Control Signal level test for the Type B interface, LM01-B, was conducted on February 22, 1995 with the results stored in data file C4002.R01. The Control Signal level test for the Type C interface, LM01-C, was conducted on February 24, 1995 with the results stored in data file C6003.R01. There were no errors, failures or anomalies during either of these two tests.

Configuration #3 - The Control Signal level test for the Type B interface, LM01-B, was conducted on March 2, 1995 with the results stored in data file O4002.R01. There were no errors, failures or anomalies during the test. The Control Signal level test for the Type C interface in this configuration was not conducted.

Configuration #4 - The Control Signal level test for the Type B interface, LM01-B, was conducted on August 25, 1995 with the results stored in data file P4002.R02. There were no errors, failures or anomalies during the test. The Control Signal level test for the Type C interface, LM01-C, was conducted on September 8, 1995 with the results stored in data file P6003.R01. There were no errors, failures or anomalies during either of these two tests.

Note: The output circuitry for the Main/Standby Select signals at the Remote RCE's radio interface was redesigned by the vendor (ECN1349) for the Final Production units (Third OT&E effort). The Automated Testbed was modified to translate the new output levels back to the baseline levels used for Configurations #1 to #3 for testing purposes. The following table provides an interpretation of the Main/Standby Select data reported in the Configuration #4 data tables and charts.

Signals	Table Value (VDC)	Production Unit
Main TX/RX	0	Open
Standby TX/RX	24	Ground

The following tables summarize voltage and current measurements taken from the Type B interface:

TESTCASE: LM01-B (Level/VDC for Configurations #1 and #2)

Level/VDC	Config: -13 dBm			Config: -8 dBm		
Signal Under Test	Min	Max	Mean	Min	Max	Mean
PTT - M TX F1 KEY (C)	12.11	12.122	12.115	12.13	12.136	12.132
PTT - M TX F1 KEY (R)	0.3398	0.3456	0.3432	0.3447	0.3528	0.3483
PTT - M CONF. KEY F1 (C)	10.809	10.817	10.812	10.819	10.828	10.823
PTT - M TX F1 REL. (R)	5.288	5.294	5.2903	5.291	5.297	5.2942
PTT - M CONF. REL. F1 (C)	0.291	0.3011	0.2951	0.2945	0.3006	0.2981
PTT - STBY TX F1 KEY (C)	12.114	12.121	12.118	12.129	12.135	12.132
PTT - STBY TX F1 KEY (R)	0.335	0.3432	0.3384	0.3406	0.349	0.3452
PTT - STBY TX F1 REL. (C)	0.2537	0.2643	0.259	0.2585	0.2687	0.2624
PTT - STBY TX F1 REL. (R)	5.285	5.293	5.2894	5.293	5.298	5.2948
PTT - M TX F2 KEY (C)	12.116	12.122	12.119	12.129	12.136	12.133
PTT - M TX F2 KEY (R)	0.3379	0.3483	0.3422	0.3395	0.3448	0.3419
PTT - M CONF. KEY F2 (C)	10.809	10.815	10.812	10.818	10.823	10.821
PTT - M TX F2 REL. (R)	5.29	5.298	5.2929	5.289	5.297	5.2923
PTT - M CONF. REL.. F2 (C)	0.2908	0.2998	0.2951	0.2947	0.3029	0.2999
PTT - STBY TX F2 KEY (C)	12.114	12.12	12.118	12.131	12.136	12.134
PTT - STBY TX F2 KEY (R)	0.3365	0.342	0.3395	0.3425	0.3482	0.345
PTT - STBY TX F2 REL. (C)	0.2553	0.263	0.2589	0.2609	0.2694	0.2646
PTT - STBY TX F2 REL. (R)	5.288	5.295	5.2917	5.292	5.298	5.2952
M/S TX SEL F1 [STBY TO M] (R)	0.2632	0.2676	0.2649	0.2586	0.2707	0.2663
M/S TX SEL CONF. F1 [STBY TO M] (C)	0.2907	0.2987	0.2956	0.293	0.2994	0.2961
M/S TX SEL F1 [M TO STBY] (C)	12.111	12.12	12.116	12.127	12.135	12.13
M/S TX SEL F1 [M TO STBY] (R)	23.593	23.602	23.598	23.453	23.468	23.46
M/S TX SEL CONF. F1 [M TO STBY] (C)	10.809	10.817	10.813	10.821	10.829	10.825
M/S TX SEL F2 [STBY TO M] (R)	0.26	0.2713	0.2661	0.2636	0.2743	0.2683
M/S TX SEL CONF. F2 [STBY TO M] (C)	0.2936	0.3001	0.2966	0.2941	0.3044	0.2983
M/S TX SEL F2 [M TO STBY] (C)	12.114	12.122	12.117	12.128	12.136	12.131
M/S TX SEL F2 [M TO STBY] (R)	23.592	23.601	23.597	23.458	23.474	23.465
M/S TX SEL CONF. F2 [M TO STBY] (C)	10.812	10.819	10.815	10.823	10.833	10.828
M/S RX SEL F1 [STBY TO M] (R)	0.2601	0.2697	0.2648	0.2649	0.2728	0.2698
M/S RX SEL CONF. F1 [STBY TO M] (C)	0.2923	0.303	0.2966	0.2959	0.3045	0.3007
M/S RX SEL F1 [M TO STBY] (C)	12.115	12.121	12.116	12.131	12.137	12.135
M/S RX SEL F1 [M TO STBY] (R)	23.594	23.6	23.597	23.462	23.476	23.466
M/S RX SEL CONF. F1 [M TO STBY] (C)	10.813	10.816	10.814	10.823	10.832	10.827
M/S RX SEL F2 [STBY TO M] (R)	0.2646	0.2709	0.2669	0.2648	0.2721	0.2668
M/S RX SEL CONF. F2 [STBY TO M] [C]	0.2521	0.2627	0.2589	0.2608	0.2702	0.2652
M/S RX SEL F2 [M TO STBY] (C)	12.112	12.118	12.115	12.131	12.137	12.134
M/S RX SEL F2 [M TO STBY] (R)	23.59	23.602	23.594	23.459	23.478	23.466
M/S RX SEL CONF. F2 [M TO STBY] (C)	10.809	10.817	10.813	10.822	10.834	10.828
(MUTE) RX MUTE/UNMUTE F1 (C)	12.112	12.118	12.116	12.128	12.135	12.132
(MUTE) RX MUTE/UNMUTE CONF. F1 (C)	10.809	10.817	10.812	10.821	10.831	10.825
(UNMUTE) RX MUTE/UNMUTE CONF. F1 (C)	0.2942	0.2993	0.2967	0.2975	0.3061	0.3011
(MUTE) RX MUTE/UNMUTE F2 (C)	12.116	12.12	12.118	12.128	12.137	12.132
(MUTE) RX MUTE/UNMUTE CONF. F2 (C)	10.812	10.819	10.815	10.82	10.827	10.825

TESTCASE: LM01-B (Level/VDC for Configurations #1 and #2)

Level/VDC	Config: -13 dBm			Config: -8 dBm		
Signal Under Test	Min	Max	Mean	Min	Max	Mean
(UNMUTE) RX MUTE/UNMUTE CONF. F2 (C)	0.298	0.3055	0.3014	0.2958	0.3047	0.3011
PTT - STBY CONF. KEY F1 (C)	10.811	10.821	10.817	10.825	10.833	10.828
PTT - STBY CONF. TX F1 REL. (C)	0.2956	0.3034	0.3	0.2977	0.3033	0.3001
PTT - STBY CONF. KEY F2 (C)	10.813	10.821	10.816	10.822	10.83	10.826
PTT - STBY CONF. TX F2 REL. (C)	0.2988	0.3043	0.3011	0.2938	0.3024	0.2971

TEST CASE: LM01-B (Level/VDC for Configurations #3 and #4)

Level/VDC	Config: 0 dBm			Config: -8 dBm/Default		
Signal Under Test	Min	Max	Mean	Min	Max	Mean
PTT - M TX F1 KEY (C)	12.127	12.137	12.132	12.128	12.132	12.13
PTT - M TX F1 KEY (R)	0.3485	0.3555	0.3521	0.3658	0.373	0.3686
PTT - M CONF. KEY F1 (C)	10.822	10.83	10.827	10.82	10.827	10.823
PTT - M TX F1 REL. (R)	5.291	5.299	5.2961	5.298	5.308	5.302
PTT - M CONF. REL. F1 (C)	0.2997	0.3078	0.3041	0.3083	0.3198	0.315
PTT - STBY TX F1 KEY (C)	12.131	12.14	12.135	12.125	12.13	12.128
PTT - STBY TX F1 KEY (R)	0.3461	0.356	0.3508	0.3557	0.3631	0.3591
PTT - STBY TX F1 REL. (C)	0.2646	0.2702	0.2672	0.2721	0.2826	0.2775
PTT - STBY TX F1 REL. (R)	5.293	5.3	5.2963	5.294	5.299	5.2974
PTT - M TX F2 KEY (C)	12.129	12.137	12.133	12.124	12.131	12.127
PTT - M TX F2 KEY (R)	0.3401	0.3479	0.3441	0.3535	0.3599	0.3565
PTT - M CONF. KEY F2 (C)	10.821	10.829	10.825	10.808	10.814	10.811
PTT - M TX F2 REL. (R)	5.29	5.296	5.2932	5.293	5.3	5.2976
PTT - M CONF. REL.. F2 (C)	0.2996	0.3069	0.3024	0.3091	0.3168	0.3116
PTT - STBY TX F2 KEY (C)	12.13	12.136	12.134	12.124	12.13	12.127
PTT - STBY TX F2 KEY (R)	0.3402	0.3508	0.3473	0.358	0.3649	0.363
PTT - STBY TX F2 REL. (C)	0.2628	0.2702	0.2651	0.2752	0.2852	0.279
PTT - STBY TX F2 REL. (R)	5.296	5.301	5.2985	5.296	5.302	5.2991
M/S TX SEL F1 [STBY TO M] (R)	0.2666	0.2739	0.2698	0.2704	0.2823	0.2787*
M/S TX SEL CONF. F1 [STBY TO M] (C)	0.2981	0.3041	0.302	0.3088	0.3201	0.3135
M/S TX SEL F1 [M TO STBY] (C)	12.13	12.137	12.133	12.124	12.131	12.128
M/S TX SEL F1 [M TO STBY] (R)	23.451	23.467	23.457	23.863	23.872	23.868*
M/S TX SEL CONF. F1 [M TO STBY] (C)	10.824	10.832	10.828	10.823	10.831	10.828
M/S TX SEL F2 [STBY TO M] (R)	0.2677	0.2754	0.271	0.2767	0.2889	0.2839*
M/S TX SEL CONF. F2 [STBY TO M] (C)	0.2982	0.3071	0.3026	0.3123	0.3175	0.3153
M/S TX SEL F2 [M TO STBY] (C)	12.128	12.133	12.13	12.122	12.129	12.127
M/S TX SEL F2 [M TO STBY] (R)	23.452	23.46	23.456	23.865	23.874	23.868*
M/S TX SEL CONF. F2 [M TO STBY] (C)	10.822	10.831	10.826	10.816	10.826	10.822
M/S RX SEL F1 [STBY TO M] (R)	0.2667	0.275	0.271	0.2768	0.2856	0.2812
M/S RX SEL CONF. F1 [STBY TO M] (C)	0.2956	0.3061	0.3018	0.3074	0.316	0.3114
M/S RX SEL F1 [M TO STBY] (C)	12.128	12.136	12.131	12.123	12.128	12.126
M/S RX SEL F1 [M TO STBY] (R)	23.449	23.462	23.456	23.862	23.87	23.865

TEST CASE: LM01-B (Level/VDC for Configurations #3 and #4)

Level/VDC	Config: 0 dBm			Config: -8 dBm/Default		
Signal Under Test	Min	Max	Mean	Min	Max	Mean
M/S RX SEL CONF. F1 [M TO STBY] (C)	10.823	10.832	10.827	10.815	10.824	10.821
M/S RX SEL F2 [STBY TO M] (R)	0.273	0.2815	0.2765	0.2771	0.2865	0.2812
M/S RX SEL CONF. F2 [STBY TO M] [C]	0.2705	0.2759	0.2728	0.2746	0.2829	0.2796
M/S RX SEL F2 [M TO STBY] (C)	12.132	12.138	12.135	12.123	12.131	12.128
M/S RX SEL F2 [M TO STBY] (R)	23.457	23.468	23.462	23.859	23.873	23.865
M/S RX SEL CONF. F2 [M TO STBY] (C)	10.824	10.836	10.83	10.818	10.828	10.824
(MUTE) RX MUTE/UNMUTE F1 (C)	12.128	12.136	12.133	12.126	12.133	12.129
(MUTE) RX MUTE/UNMUTE CONF. F1 (C)	10.82	10.83	10.825	10.821	10.827	10.824
(UNMUTE) RX MUTE/UNMUTE CONF. F1 (C)	0.2998	0.3045	0.3018	0.3122	0.3187	0.3152
(MUTE) RX MUTE/UNMUTE F2 (C)	12.125	12.132	12.129	12.124	12.128	12.126
(MUTE) RX MUTE/UNMUTE CONF. F2 (C)	10.819	10.83	10.824	10.815	10.826	10.818
(UNMUTE) RX MUTE/UNMUTE CONF. F2 (C)	0.3002	0.3089	0.3039	0.3089	0.318	0.3135
PTT - STBY CONF. KEY F1 (C)	10.825	10.833	10.828	10.816	10.827	10.823
PTT - STBY CONF. TX F1 REL. (C)	0.2988	0.3061	0.3018	0.31	0.3182	0.3143
PTT - STBY CONF. KEY F2 (C)	10.817	10.828	10.824	10.811	10.82	10.817
PTT - STBY CONF. TX F2 REL. (C)	0.3016	0.3077	0.3038	0.3113	0.3196	0.3162

* Output of testbed modification to enable test of Main/Standby Select (ATR) signal of Remote RCE.

TESTCASE: LM01-B (Level/Milliamps for Configurations #1 and #2)

Level/Milliamps	Config: -13 dBm			Config: -8 dBm		
Signal Under Test	Min	Max	Mean	Min	Max	Mean
PTT - M TX F1 KEY (C)	0.1218	0.1357	0.1298	0.1278	0.1357	0.1312
PTT - M CONF. KEY F1 (C)	0.4209	0.4378	0.4284	0.4219	0.4318	0.4272
PTT - M CONF. REL. F1 (C)	0.001	0.0059	0.0023	0.001	0.0089	0.0033
PTT - STBY TX F1 KEY (C)	0.1218	0.1367	0.1296	0.1258	0.1337	0.13
PTT - M TX F2 KEY (C)	0.1258	0.1397	0.1321	0.1278	0.1367	0.1314
PTT - M CONF. KEY F2 (C)	0.4229	0.4348	0.4292	0.4219	0.4388	0.4302
PTT - M CONF. REL.. F2 (C)	0.001	0.0089	0.0044	0.001	0.0069	0.0031
PTT - STBY TX F2 KEY (C)	0.1278	0.1377	0.1317	0.1258	0.1377	0.1316
M/S TX SEL CONF. F1 [STBY TO M] (C)	0.001	0.0109	0.0047	0.001	0.0069	0.0033
M/S TX SEL F1 [M TO STBY] (C)	0.1198	0.1397	0.1313	0.1179	0.1337	0.1287
M/S TX SEL CONF. F1 [M TO STBY] (C)	0.4199	0.4289	0.425	0.4199	0.4318	0.4278
M/S TX SEL CONF. F2 [STBY TO M] (C)	0	0.005	0.0029	0.001	0.0069	0.0035
M/S TX SEL F2 [M TO STBY] (C)	0.1297	0.1377	0.1329	0.1278	0.1387	0.1312
M/S TX SEL CONF. F2 [M TO STBY] (C)	0.4249	0.4318	0.4276	0.419	0.4308	0.4285
M/S RX SEL CONF. F1 [STBY TO M] (C)	0.001	0.0109	0.004	0.001	0.003	0.002
M/S RX SEL F1 [M TO STBY] (C)	0.1248	0.1337	0.1295	0.1258	0.1337	0.1291
M/S RX SEL CONF. F1 [M TO STBY] (C)	0.417	0.4279	0.4239	0.4209	0.4348	0.4293
M/S RX SEL CONF. F2 [STBY TO M] [C]	0.001	0.0069	0.0027	0	0.005	0.0021
M/S RX SEL F2 [M TO STBY] (C)	0.1198	0.1357	0.1303	0.1218	0.1357	0.1295

TESTCASE: LM01-B (Level/Milliamps for Configurations #1 and #2)

Level/Milliamps	Config: -13 dBm			Config: -8 dBm		
Signal Under Test	Min	Max	Mean	Min	Max	Mean
M/S RX SEL CONF. F2 [M TO STBY] (C)	0.4239	0.4368	0.4296	0.4199	0.4289	0.4249
(MUTE) - RX MUTE/UNMUTE F1 (C)	0.1258	0.1337	0.1295	0.1198	0.1397	0.1314
(MUTE) - RX MUTE/UNMUTE CONF. F1 (C)	0.4199	0.4308	0.4273	0.4239	0.4328	0.4281
(UNMUTE) - RX MUTE/UNMUTE CONF. F1 (C)	0.001	0.0069	0.0036	0.001	0.0099	0.0037
(MUTE) - RX MUTE/UNMUTE F2 (C)	0.1218	0.1377	0.1288	0.1258	0.1357	0.1304
(MUTE) - RX MUTE/UNMUTE CONF. F2 (C)	0.4229	0.4368	0.4295	0.4219	0.4378	0.4299
(UNMUTE) - RX MUTE/UNMUTE CONF. F2 (C)	0.001	0.0069	0.0034	0.001	0.0079	0.0042
PTT - STBY CONF. KEY F1 (C)	0.418	0.4328	0.4268	0.4249	0.4407	0.4294
PTT - STBY CONF. TX F1 REL. (C)	0.001	0.0129	0.0039	0.001	0.0069	0.0038
PTT - STBY CONF. KEY F2 (C)	0.4239	0.4368	0.4305	0.4249	0.4407	0.4301
PTT - STBY CONF. TX F2 REL. (C)	0.001	0.0069	0.0018	0.001	0.0069	0.0038

TEST CASE: LM01-B (Level/Milliamps for Configurations #3 and #4)

Level/Milliamps	Config: 0 dBm			Config: -8 dBm/Default		
Signal Under Test	Min	Max	Mean	Min	Max	Mean
PTT - M TX F1 KEY (C)	0.1278	0.1416	0.1313	0.1238	0.1337	0.1295
PTT - M CONF. KEY F1 (C)	0.4219	0.4308	0.4269	0.4229	0.4368	0.4283
PTT - M CONF. REL. F1 (C)	0.001	0.003	0.002	0.001	0.005	0.0027
PTT - STBY TX F1 KEY (C)	0.1278	0.1377	0.1316	0.1258	0.1416	0.1319
PTT - M TX F2 KEY (C)	0.1238	0.1357	0.1312	0.1278	0.1357	0.133
PTT - M CONF. KEY F2 (C)	0.4229	0.4348	0.4286	0.4229	0.4348	0.4297
PTT - M CONF. REL.. F2 (C)	0.001	0.0069	0.0036	0.001	0.0089	0.0033
PTT - STBY TX F2 KEY (C)	0.1258	0.1317	0.1301	0.1278	0.1416	0.1332
M/S TX SEL CONF. F1 [STBY TO M] (C)	0.001	0.005	0.003	0.001	0.0069	0.0034
M/S TX SEL F1 [M TO STBY] (C)	0.1258	0.1377	0.1322	0.1218	0.1377	0.1293
M/S TX SEL CONF. F1 [M TO STBY] (C)	0.4229	0.4348	0.4268	0.4199	0.4308	0.4261
M/S TX SEL CONF. F2 [STBY TO M] (C)	0.001	0.0089	0.0038	0.001	0.0089	0.0029
M/S TX SEL F2 [M TO STBY] (C)	0.1297	0.1357	0.1318	0.1278	0.1397	0.1319
M/S TX SEL CONF. F2 [M TO STBY] (C)	0.417	0.4308	0.4252	0.4239	0.4328	0.4282
M/S RX SEL CONF. F1 [STBY TO M] (C)	0.001	0.003	0.0022	0	0.0089	0.0036
M/S RX SEL F1 [M TO STBY] (C)	0.1258	0.1377	0.1315	0.1238	0.1397	0.1314
M/S RX SEL CONF. F1 [M TO STBY] (C)	0.4219	0.4308	0.4268	0.4219	0.4338	0.4269
M/S RX SEL CONF. F2 [STBY TO M] [C]	0.001	0.0129	0.0032	0.001	0.005	0.0021
M/S RX SEL F2 [M TO STBY] (C)	0.1238	0.1367	0.1297	0.1278	0.1436	0.1325
M/S RX SEL CONF. F2 [M TO STBY] (C)	0.4219	0.4289	0.427	0.418	0.4348	0.4271
(MUTE) - RX MUTE/UNMUTE F1 (C)	0.1268	0.1377	0.1312	0.1258	0.1357	0.13
(MUTE) - RX MUTE/UNMUTE CONF. F1 (C)	0.4229	0.4338	0.4276	0.4249	0.4308	0.4277
(UNMUTE) - RX MUTE/UNMUTE CONF. F1 (C)	0.001	0.005	0.0026	0.001	0.0089	0.0042
(MUTE) - RX MUTE/UNMUTE F2 (C)	0.1278	0.1337	0.1305	0.1278	0.1416	0.1321
(MUTE) - RX MUTE/UNMUTE CONF. F2 (C)	0.4249	0.4368	0.4285	0.4209	0.4348	0.4288
(UNMUTE) - RX MUTE/UNMUTE CONF. F2 (C)	0.001	0.0089	0.0039	0.001	0.0089	0.0046

5.1.2.1.12 EI02-IS - Telephone Line Isolation

Test Procedures Reference: A1-1

There were no anomalies detected for EI02-IS testing for Configuration #1. The following table provides a summary of the results of Telephone Line Isolation testing on the Type B interface.

Signal Path Under Test		Isolation Resistance (ohms)
Control Output Primary Telco Uplink TX 1	+	9.9E+37
	-	9.9E+37
Control Input Primary Telco Downlink RX 1	+	9.9E+37
	-	9.9E+37
Remote Output Primary Telco Uplink TX 1	+	9.9E+37
	-	9.9E+37
Remote Input Primary Telco Downlink RX 1	+	9.9E+37
	-	9.9E+37

Note: Isolation Resistance of 9.9E+37 ohms is effectively an open circuit.

5.1.2.1.13 EI02-VG - VG6 Operation, Interface B/C

Test Procedures Reference: A1-13

The results for EI02-VG testing for Configuration's #1, #2, #3, and #4 were the following: Note: No discernible trends were discovered from the data charts, therefore only test data for Configuration #2 were plotted. Type B VG6 timing data plots are in Appendix A, pages A-5-1 to A-5-7. Type C VG6 timing data plots are in Appendix A, pages A-5-8 to A-5-14.

Configuration #1 - The VG6 operational testing on the Type B interface was conducted on December 8, 1994 with the results stored in data file C1142.R01. Type C interface testing was not performed. Four combinations within each of the degradation subtests failed due to the Main/Standby selection timing exceeding the maximum value. These failures were documented in PTR-004. PTR-004 was closed due to testing methodology changes. There was also a failure within the Intermodulation Distortion subtest due to a no signal received condition as documented in PTR-005. PTR-005 was closed after the cause of the failure was traced to the Automated Testbed's IBASIC/Windows software. Configuration #1 test data are listed in Appendix B, pages B-3-1 to B-3-3.

Configuration #2 - The VG6 operational testing on the Type B interface was conducted on March 28, 1995 with the results stored in data file C1142.R02. Type B test data are listed in Appendix B, pages B-3-4 to B-3-6. VG6 operational testing on the Type C interface was

Quad PTT/Audio Configuration

Signal Path Under Test		Type B Interface Isolation Resistance	Type B Interface Impedance	Type C Interface Isolation Resistance	Type C Interface Impedance
Main TX Freq 1	+	9.9E+37	602.89	9.9E+37	608.44
	-	9.9E+37		9.9E+37	
Main RX Freq 1	+	9.9E+37	624.19	9.9E+37	625.43
	-	9.9E+37		9.9E+37	
Stby TX Freq 1	+	9.9E+37	603.31	9.9E+37	607.73
	-	9.9E+37		9.9E+37	
Stby RX Freq 1	+	9.9E+37	624.61	9.9E+37	622.25
	-	9.9E+37		9.9E+37	
Main TX Freq 2	+	9.9E+37	607.10	9.9E+37	607.19
	-	9.9E+37		9.9E+37	
Main RX Freq 2	+	9.9E+37	625.20	9.9E+37	623.98
	-	9.9E+37		9.9E+37	
Stby TX Freq 2	+	9.9E+37	607.49	9.9E+37	606.89
	-	9.9E+37		9.9E+37	
Stby RX Freq 2	+	9.9E+37	624.05	9.9E+37	624.92
	-	9.9E+37		9.9E+37	

Note: All isolation resistance and impedance values are in ohms. Isolation Resistance of 9.9E+37 ohms is effectively an open circuit.

5.1.2.1.11 EI02-IM - Telephone Line Impedance

Test Procedures Reference: A1-11

There were no anomalies detected for EI02-IM testing for Configuration #1. The following tables provide a summary of the results of Telephone Line Impedance testing on the. Type B interface:

Type B Interface

Signal Path Under Test.	Impedance (ohms)
Control Output Primary Telco Uplink TX 1	567.57
Control Input Primary Telco Downlink RX 1	552.27
Remote Output Primary Telco Uplink TX 1	570.71
Remote Input Primary Telco Downlink RX 1	548.68

TEST CASE: LM01-C (Level/VDC for Configurations #1, #2, and #4)

Level/VDC	Config: -13 dBm			Config: -8 dBm			Config: -8 dBm/Default		
Signal Under Test	Min	Max	Mean	Min	Max	Mean	Min	Max	Mean
M RX SEL CONF. F2 [STBY TO M] (C)	0.0015	0.0016	0.0015	0.0015	0.0016	0.0015	0.0015	0.0015	0.0015
STBY RX SEL CONF. F2 [STBY TO M] (C)	4.958	5.0178	4.9859	4.9474	5.0148	4.9805	4.9717	4.993	4.9821
M/S RX SEL F2 [M TO STBY] (R)	23.615	23.706	23.65	23.676	23.747	23.707	23.97	23.99	23.981
STBY RX SEL CONF. F2 [M TO STBY] (C)	0.0015	0.0016	0.0015	0.0015	0.0016	0.0016	0.0015	0.0015	0.0015
M RX SEL CONF. F2 [M TO STBY] (C)	4.9393	5.0148	4.9752	4.9464	5.0062	4.9767	4.9707	4.9915	4.9802
PTT - STBY CONF. KEY F1 (C)	0.0016	0.0017	0.0017	0.0016	0.0017	0.0017	0.0016	0.0016	0.0016
PTT - STBY CONF. REL. F1 (C)	4.9469	5.0198	4.9754	4.9565	5.0163	4.9829	4.9737	4.9894	4.9811
PTT - STBY CONF. KEY F2 (C)	0.0014	0.0015	0.0015	0.0014	0.0015	0.0015	0.0014	0.0015	0.0015
PTT - STBY CONF. REL. F2 (C)	4.959	5.0219	5.0001	4.9469	5.0209	4.9716	4.9758	4.9915	4.9846

5.1.2.1.9 SC01-B/C - Single Channel Operation

Test Procedures Reference: A1-9

Quad PTT/Audio Configuration. The results for SC01-B/C testing for Configuration's #1, #2, #3, and #4 were the following:

Configuration #1 - No anomalies detected for Types B and C at -13 dBm Telco level.

Configuration #2 - No anomalies detected for Types B and C at -8 dBm Telco level.

Configuration #3 - No anomalies detected for Type B at 0 dBm Telco level.

Configuration #3 - No anomalies detected for Type B at -8 dBm/Default Telco level.

5.1.2.1.10 EI01-B/C - VSCE Voice Interface

Test Procedures Reference: A1-10

There were no anomalies detected for EI01-B/C testing for Configuration #1. The following table provides a summary of the results of the Control RCE's VSCE Voice interface testing for Type B and C interfaces:

TEST CASE: LM01-B (Level/Milliamps for Configurations #3 and #4)

Level/Milliamps	Config: 0 dBm			Config: -8 dBm/Default		
Signal Under Test	Min	Max	Mean	Min	Max	Mean
PTT - STBY CONF. KEY F1 (C)	0.4249	0.4328	0.4284	0.418	0.4358	0.4277
PTT - STBY CONF. TX F1 REL. (C)	0	0.005	0.0017	0.001	0.0069	0.0041
PTT - STBY CONF. KEY F2 (C)	0.4249	0.4338	0.4292	0.4219	0.4368	0.4282
PTT - STBY CONF. TX F2 REL. (C)	0	0.005	0.0017	0	0.0089	0.0029

The following table summarizes voltage measurements taken from the Type C interface.

TEST CASE: LM01-C (Level/VDC for Configurations #1, #2, and #4)

Level/VDC	Config: -13 dBm			Config: -8 dBm			Config: -8 dBm/Default		
Signal Under Test	Min	Max	Mean	Min	Max	Mean	Min	Max	Mean
PTT - M TX F1 KEY (R)	0.0776	0.0778	0.0777	0.0797	0.08	0.0799	0.078	0.078	0.078
PTT - M CONF. KEY F1 (C)	0.0016	0.0017	0.0017	0.0016	0.0017	0.0017	0.0015	0.0016	0.0016
PTT - M TX F1 REL. (R)	4.9869	4.992	4.9899	4.9874	4.9925	4.9901	4.9874	4.991	4.9897
PTT - M CONF. REL. F1 (C)	4.9611	5.0209	4.9869	4.9525	5.0153	4.9796	4.9737	4.993	4.9829
PTT - STBY TX F1 KEY (R)	0.0692	0.0693	0.0692	0.0708	0.071	0.0709	0.0741	0.0742	0.0742
PTT - STBY TX F1 REL. (R)	4.9879	4.9925	4.9895	4.9874	4.991	4.9894	4.9889	4.9915	4.9903
PTT - M TX F2 KEY (R)	0.0672	0.0673	0.0673	0.069	0.0692	0.0691	0.0711	0.0712	0.0711
PTT - M CONF. KEY F2 (C)	0.0015	0.0015	0.0015	0.0015	0.0015	0.0015	0.0014	0.0015	0.0015
PTT - M TX F2 REL. (R)	4.9884	4.993	4.9906	4.9874	4.9925	4.9896	4.9884	4.991	4.9899
PTT - M CONF. REL.. F2 (C)	4.9428	5.0193	4.99	4.9484	5.0102	4.9802	4.9727	4.9925	4.9791
PTT - STBY TX F2 KEY (R)	0.0682	0.0684	0.0683	0.0699	0.07	0.0699	0.0739	0.074	0.074
PTT - STBY TX F2 REL. (R)	4.9879	4.992	4.9896	4.9884	4.993	4.9906	4.9889	4.9915	4.9903
M/S TX SEL F1 [STBY TO M] (R)	0.0196	0.1524	0.1032	0.0243	0.1531	0.0852	0.0363	0.1232	0.0872
M TX SEL CONF. F1 [STBY TO M] (C)	0.0014	0.0015	0.0014	0.0014	0.0015	0.0014	0.0014	0.0014	0.0014
STBY TX SEL CONF. F1 [STBY TO M] (C)	4.9454	5.0117	4.9812	4.956	5.0224	4.9903	4.9763	4.9945	4.9875
M/S TX SEL F1 [M TO STBY] (R)	23.615	23.691	23.651	23.67	23.767	23.718	23.975	23.995	23.985
STBY TX SEL CONF. F1 [M TO STBY] (C)	0.0016	0.0016	0.0016	0.0016	0.0017	0.0016	0.0016	0.0016	0.0016
M TX SEL CONF. F1 [M TO STBY] (C)	4.957	5.0128	4.9869	4.9509	5.0107	4.9741	4.9722	4.991	4.9771
M/S TX SEL F2 [STBY TO M] (R)	0.0573	0.1574	0.1028	-0.009	0.1745	0.08	0.0466	0.1136	0.0904
M TX SEL CONF. F2 [STBY TO M] (C)	0.0015	0.0015	0.0015	0.0014	0.0015	0.0015	0.0014	0.0015	0.0015
STBY TX SEL CONF. F2 [STBY TO M] (C)	4.953	5.0133	4.9862	4.9585	5.0229	4.9926	4.9768	4.993	4.9861
M/S TX SEL F2 [M TO STBY] (R)	23.625	23.691	23.645	23.676	23.747	23.707	23.97	23.995	23.984
STBY TX SEL CONF. F2 [M TO STBY] (C)	0.0015	0.0015	0.0015	0.0015	0.0015	0.0015	0.0019	0.0019	0.0019
M TX SEL CONF. F2 [M TO STBY] (C)	4.9575	5.0229	4.9917	4.9449	5.0148	4.9773	4.9707	4.992	4.9809
M/S RX SEL F1 [STBY TO M] (R)	0.0456	0.1254	0.0836	-0.009	0.1624	0.0765	0.0304	0.0992	0.0685
M RX SEL CONF. F1 [STBY TO M] (C)	0.0017	0.0017	0.0017	0.0017	0.0017	0.0017	0.0016	0.0017	0.0017
STBY RX SEL CONF. F1 [STBY TO M] (C)	4.9438	5.0224	4.9755	4.9443	5.0143	4.9767	4.9732	4.9889	4.9796
M/S RX SEL F1 [M TO STBY] (R)	23.615	23.686	23.652	23.645	23.742	23.708	23.98	23.995	23.987
STBY RX SEL CONF. F1 [M TO STBY] (C)	0.0015	0.0015	0.0015	0.0015	0.0015	0.0015	0.0014	0.0015	0.0015
M RX SEL CONF. F1 [M TO STBY] (C)	4.953	5.0102	4.9758	4.9535	5.0204	4.9793	4.9722	4.9935	4.9809
M/S RX SEL F2 [STBY TO M] (R)	-0.003	0.1579	0.0827	0.0417	0.1571	0.0846	0.0399	0.1082	0.0705

conducted on March 24, 1995 with the results stored in data file C1143.R01. Type C test data are listed in Appendix B, pages B-3-7 to B-3-8. There were no errors, failures or anomalies during this test.

Configuration #3 - The VG6 operational testing on the Type B interface was conducted on March 3, 1995 with the results stored in data file O1142.R01. VG6 operational testing for the Type C interface in this configuration was not conducted. Configuration #3 test data are listed in Appendix B, pages B-3-9 to B-3-11. There were no errors, failures or anomalies during this test.

Configuration #4 - The VG6 worst case (Frequency Shift of +1 Hz) operational testing with maximum satellite delay (300 msec) and maximum impulse noise (90 dBrnc, 10 msec) was conducted on the Type B interface on August 28, 1995. VG6 worst case testing consisted of executing the following separate tests; TM01-B, TM01-MB, LM01-B, LM01-MB, and TELCO_XX. The results were stored in data files; P3002.003, P7102.002, P4002.003, P7002.002, and P1192.001. VG6 operational testing for the Type C interface in this configuration was not conducted. Configuration #4 test data are listed in Appendix B, pages B-3-12 to B-3-15. Configuration #4 VG6 timing and mute timing data plots are in Appendix A, pages A-5-15 to A-5-20. There were no errors, failures or anomalies directly resulting from this test scenario. There were failures during the TM01-MB portion of this test. These failures are not related to worst case VG6 testing. PTR-065 addresses the failures (refer to TM01-MB, Section 5.1.2.1.1).

5.1.2.1.14 EI03 - RCE/Solid State Remote Radio Equipment Interface

Test Procedures Reference: A1-14

There were no anomalies detected for EI03 testing for Configuration #1. It should be noted that the results for Configuration #1 should not be utilized for the production RCE units. Refer to LM01-B/C test results (Section 5.1.2.1.8), Configuration #4 for the results of ATR testing with ECN1349 incorporated. The following tables provide a summary of the results of the Remote Radio Equipment interface testing.

Signal Path Under Test.		Isolation Resistance	Impedance
Main Transmitter Frequency 1	+	9.9E+37	620.73
	-	9.9E+37	
Main Receiver Frequency 1	+	9.9E+37	595.66
	-	9.9E+37	
Stby Transmitter Frequency 1	+	9.9E+37	619.56
	-	9.9E+37	
Stby Receiver Frequency 1	+	9.9E+37	595.74
	-	9.9E+37	
Main Transmitter Frequency 2	+	9.9E+37	615.98
	-	9.9E+37	
Main Receiver Frequency 2	+	9.9E+37	597.27
	-	9.9E+37	
Stby Transmitter Frequency 2	+	9.9E+37	618.29
	-	9.9E+37	
Stby Receiver Frequency 2	+	9.9E+37	597.13
	-	9.9E+37	

Note: All isolation resistance and impedance values are in ohms. Isolation resistance of 9.9E+37 ohms is effectively an open circuit.

Signal Path Under Test.	Unloaded Voltage	Loaded Voltage
Main Transmitter Frequency 1 ATR	0.024	0.00
Stby Transmitter Frequency 1 ATR	23.590	21.99
Main Transmitter Frequency 2 ATR	0.060	0.00
Stby Transmitter Frequency 2 ATR	23.590	22.03
Main Receiver Frequency 1 ATR	0.060	0.00
Stby Receiver Frequency 1 ATR	23.590	21.99
Main Receiver Frequency 2 ATR	0.070	0.00
Stby Receiver Frequency 2 ATR	23.590	22.02

Signal Path Under Test.	PTT Off	PTT On
PTT Main Transmitter Frequency 1	4.99	0.078
PTT Stby Transmitter Frequency 1	4.99	0.070
PTT Main Transmitter Frequency 2	4.99	0.070
PTT Stby Transmitter Frequency 2	4.99	0.070

Note: All voltage values are in VDC. PTT Off is open circuit and PTT On is ground.

5.1.2.1.15 CN03 - Single Channel Configuration

Test Procedures Reference: A1-15

Configuration #1 - The results of CN03 testing on the Type B interface are contained in the following data files:

Test	Date	Data File
1. 102 VAC at 57 Hz	12/20/94	C118201.R01
2. 120 VAC at 57 Hz	12/20/94	C118202.R01
3. 120 VAC at 63 Hz	12/20/94	C118203.R01
4. 138 VAC at 63 Hz	12/20/94	C118204.R01
5. 177 VAC at 57 Hz	12/21/94	C118205.R02
6. 208 VAC at 57 Hz	12/22/94	C118206.R03
7. 208 VAC at 63 Hz	12/22/94	C118207.R04
8. 239 VAC at 63 Hz	12/22/94	C118208.R05
9. 276 VAC at 60 Hz	12/23/94	C118209.R06
10. 120 VAC at 60 Hz /18 VDC at 3.5 Amp	12/23/94	C118210.R07
11. 208 VAC at 60 Hz /24 VDC at 3.5 Amp	12/23/94	C118211.R08
12. 240 VAC at 60 Hz /30 VDC at 3.5 Amp	12/23/94	C118212.R09

There were no errors, failures or anomalies directly resulting from this test scenario. However, the following subtest failures occurred as described below. Failures due to Main/Standby selection timing exceeding maximum value occurred during eight of the twelve power settings. These failures were documented in PTR-004, later closed due to testing methodology changes. Failures due to the RCE not achieving data modem lock occurred during four of the twelve power settings. These failures were documented in PTR-007. Failures due to a no signal received condition occurred during four of the twelve power settings and one time non-repeatable failures occurred during the level (LM01-B) and the single channel (SC01) tests. These failures were documented in PTR-005, later closed with the cause of failures related to testbed's IBASIC/Windows software. Type B timing and level data are listed in Appendix B, pages B-4-1 to B-4-12. Type B timing data plots are in Appendix A, pages A-6-1 to A-6-36.

Configuration #4 - The results of CN03 testing on the Type B interface are contained in the following data files:

TEST	DATE	DATA FILE
1. 102 VAC at 57 Hz	8/30/95	P118201.R01
2. 120 VAC at 57 Hz	8/30/95	P118202.R01
3. 120 VAC at 63 Hz	8/30/95	P118203.R01
4. 138 VAC at 63 Hz	8/30/95	P118204.R01
5. 177 VAC at 57 Hz	8/30/95	P118205.R01
6. 208 VAC at 57 Hz	8/30/95	P118206.R01
7. 208 VAC at 63 Hz	8/30/95	P118207.R01
8. 239 VAC at 63 Hz	8/30/95	P118208.R01
9. 276 VAC at 60 Hz	8/30/95	P118209.R01
10. 120 VAC at 60 Hz /18 VDC at 3.5 Amp	8/30/95	P118210.R02
11. 208 VAC at 60 Hz /24 VDC at 3.5 Amp	8/31/95	P118211.R02
12. 240 VAC at 60 Hz /30 VDC at 3.5 Amp	8/31/95	P118212.R02

Type B timing and level data are listed in Appendix B, pages B-4-13 to B-4-24. Type B timing data plots are in Appendix A, pages A-6-37 to A-6-72. There were no errors, failures or anomalies during this test.

5.1.2.1.16 EI02-TL - Telephone Line Transmit Adjust

Test Procedures Reference: A1-16

The results for EI02-TL testing for Configuration #1 were the following: During testing, the units under test would loose data modem lock. After several attempts at trying to establish data modem lock, it was determined that setting the modem level at no greater than -15 dB from the audio level would permit the units to maintain data modem lock. It should be noted that the modem level should be set prior to adjusting the audio level. When the audio level was set first, the units lost data modem lock. To set the new modem level then required directly connecting the MDT to the Remote Unit. This was documented in PTR-018.

The following tables provide a summary of the results of Telephone Transmit Level Adjust testing.

5.1.2.2.1 ER01-B - Electrical Requirements

Test Procedures Reference: A2

The following ER01-B data were obtained to verify specification requirements. The RCE Specification Sheet and data provided by the vendor indicates the Control RCE is capable of supplying at least 12 VDC @ 350 mA. The test was performed with the following results:

Voltage provided: 11.949 VDC Current provided: 51.618 mA

The test was modified for the Third OT&E effort to verify the Remote RCE could provide 24 VDC nominal (+20 VDC Min, +30 VDC Max) @ ≥600 mA. The test was performed with the following results:

Voltage provided: 23.1 VDC Current provided: 600 mA

5.1.2.2.2 ER02-B - Functional Signal Inputs

Test Procedures Reference: A3

The ER02-B test results are listed in the following tables:

Signal	+15 VDC @ 0.5 mA	+9 VDC @ 0.5 mA
PTT Main F1	OK	OK
PTT Stby F1	OK	OK
PTT Main F2	OK	OK
PTT Stby F2	OK	OK
STBY TX F1	OK	OK
STBY TX F2	OK	OK
STBY RX F1	OK	OK
STBY RX F2	OK	OK
RX Mute F1	OK	OK
RX Mute F2	OK	OK

Signal	0.0 VDC ± 1.0 VDC @ 20 mA
Main TX F1	OK
Main TX F2	OK
Main RX F1	OK
Main RX F2	OK
RX Unmute F1	OK
RX Unmute F2	OK
PTT Release F1	OK
PTT Release F2	OK

5.1.2.2 Manual Tests

Checklist for Phase 1: RCE Testbed Manual Tests

TEST - Label and Description		First and Second OT&E Efforts		Third OT&E Effort	
		P/F	PTR(s)	P/F	PTR(s)
ER01-B	Electrical Requirements	P		N/A	
ER02-B	Functional Signal Inputs	P		N/A	
AC02	Isolation	P		N/A	
GN01	AC Grounding	P		N/A	
GN02	Chassis Grounding	P		N/A	
CF01	Harmonic Content	P		P	
CF02	Inrush Current Limiting	F	028	F	028
CF03	Control Facility Power Factor	F	028	P	
VH01	Voice Quality	F	016	F	016
EI02-LB	Longitudinal Balance	P		N/A	
IT01	PTT (M/S) Transfer Inhibit	P		N/A	
LR01	LRU Removal and Insertion	P		N/A	
MN01	Front Panel Status Indicators	F*	009	N/A	
MN02	Front Panel Maintenance Control	F*	008	N/A	
MN03	Voice Access Jacks	F*	027	N/A	
DR01-C	Dry Relay Contact Parameters	P		P	
ER03-B	Output Short Circuit	F	006	P	

* Variances in the manufacturer's implementation were accepted by the Program Office.

Signal Path Under Test	Telco RX Input (dBm)	Adjusted to Min (dBm)	Adjusted to Max (dBm)
Control RCE Unit			
Main Receiver Frequency 1	+5	-23.0	-11.0
	-7	-23.0	-11.0
	-20	-23.0	-11.0
Stby Receiver Frequency 1	+5	-23.0	-11.0
	-7	-23.0	-11.0
	-20	-23.0	-11.0
Main Receiver Frequency 2	+5	-23.0	-11.0
	-7	-23.0	-11.0
	-20	-23.0	-11.0
Stby Receiver Frequency 2	+5	-23.0	-11.0
	-7	-23.0	-11.0
	-20	-23.0	-11.0
Remote RCE Unit			
Main Transmitter Frequency 1	+5	-10.5	-9.5
	-7	-10.5	-9.5
	-20	-10.5	-9.5
Stby Transmitter Frequency 1	+5	-10.5	-9.5
	-7	-10.5	-9.5
	-20	-10.5	-9.5
Main Transmitter Frequency 2	+5	-10.5	-9.5
	-7	-10.5	-9.5
	-20	-10.5	-9.5
Stby Transmitter Frequency 2	+5	-10.5	-9.5
	-7	-10.5	-9.5
	-20	-10.5	-9.5

Type B Interface Signal Path Under Test	Input (dBm)	Telco Min (dBm)	Telco Max (dBm)
Control RCE Unit			
Main Transmitter Frequency 1	-11	-20.3	+5.9
	-5	-20.3	+5.9
	+1	-20.5	+5.9
Stby Transmitter Frequency 1	-11	-20.0	+5.5
	-5	-20.7	+5.5
	+1	-20.7	+5.5
Main Transmitter Frequency 2	-11	-20.8	+5.6
	-5	-20.4	+5.4
	+1	-20.4	+5.4
Stby Transmitter Frequency 2	-11	-20.8	+5.4
	-5	-20.6	+5.4
	+1	-20.7	+5.4
Remote RCE Unit			
Main Receiver Frequency 1	-2	-20.5	+5.1
	0	-20.8	+5.5
	+2	-20.4	+5.4
Stby Receiver Frequency 1	-2	-20.1	+5.5
	0	-20.4	+5.6
	+2	-20.4	+5.6
Main Receiver Frequency 2	-2	-21.0	+5.8
	0	-20.9	+5.6
	+2	-20.5	+5.6
Stby Receiver Frequency 2	-2	-20.9	+5.6
	0	-20.9	+5.6
	+2	-20.4	+5.6

5.1.2.1.17 EI02-RL - Telephone Line Receive Adjust

Test Procedures Reference: A1-17

The results for EI02-RL testing for Configuration #1 were the following: During testing, the units would loose data modem lock. Refer to EI02-TL for a description of problem.

The following tables provide a summary of the results of Telephone Receiver Level Adjust testing.

5.1.2.2.3 AC02 - Isolation

Test Procedures Reference: A4

The results of AC02 testing were the following: The Isolation test was conducted on the Control and Remote RCE units. The resistance on both units was measured to be greater than one megaohm which is in accordance with the specification.

5.1.2.2.4 GN01 - AC Grounding

Test Procedures Reference: A5

The results of GN01 testing were the following: No Anomalies detected. The AC Grounding test was conducted on the Control and Remote RCE units. Both units were measured to be 0.1 ohms.

5.1.2.2.5 GN02 - Chassis Grounding

Test Procedures Reference: A6

The result of GN02 testing were the following: The Chassis Grounding test was conducted on the Control and Remote RCE units. Both units were measured to be 0.2 ohms or less between front panel, chassis, DVC and JIC cards.

5.1.2.2.6 CF01 - Harmonic Content

Test Procedures Reference: A7

The results of CF01 testing were the following: The test was performed on the original power supply, a prototype power supply, a modified prototype power supply, and a final production unit power supply with a fan. Results of testing indicated that the power for the equipment for all three voltage ranges (120, 208, and 240 VAC) was less than 50 watts. FAA-G-2100F, General Requirements, Electronic Equipment does not state a harmonic distortion for power less than 50 watts.

Full Power-up Harmonic Content testing was performed on multiples of 12 and 16 units at the Los Angeles ARTCC (ZLA). The 12 and 16 unit systems met the harmonic distortion requirement. The results are summarized in the following tables.

Number of Units = 12

Measured Power (W) = 362.70 watts

Harmonic Order	Maximum Limit	Max Current Allowed (mA)	Measured Harmonic Current (rms)
2	1.00 x W	362.70	0.0
3	3.60 x W	1305.72	120.0
4	1.00 x W	362.70	0.0
5	2.00 x W	725.40	90.0
6	0.50 x W	181.35	0.0
7	1.50 x W	544.05	130.0
8	0.50 x W	181.35	0.0
9	1.00 x W	362.70	70.0
10	0.10 x W	36.27	0.0
11	0.60 x W	217.62	70.0
12	0.10 x W	36.27	0.0
13	0.51 x W	184.98	70.0
14	0.10 x W	36.27	0.0
15	0.44 x W	159.59	40.0
16	0.10 x W	36.27	0.0
17	0.39 x W	141.45	50.0
18	0.10 x W	36.27	0.0
19	0.35 x W	126.95	50.0
20	0.10 x W	36.27	0.0

Number of Units = 16

Measured Power (W) = 479.40 watts

Harmonic Order	Maximum Limit	Max Current Allowed (mA)	Measured Harmonic Current (rms)
2	1.00 x W	479.40	0.0
3	3.60 x W	1725.84	140.0
4	1.00 x W	479.40	0.0
5	2.00 x W	958.80	120.0
6	0.50 x W	239.70	0.0
7	1.50 x W	719.10	170.0
8	0.50 x W	239.70	0.0
9	1.00 x W	479.40	100.0

Number of Units = 16

Measured Power (W) = 479.40 watts

Harmonic Order	Maximum Limit	Max Current Allowed (mA)	Measured Harmonic Current (rms)
10	0.10 x W	47.94	0.0
11	0.60 x W	287.64	90.0
12	0.10 x W	47.94	0.0
13	0.51 x W	244.49	90
14	0.10 x W	47.94	0.0
15	0.44 x W	210.94	60.0
16	0.10 x W	47.94	0.0
17	0.39 x W	186.97	70.0
18	0.10 x W	47.94	0.0
19	0.35 x W	167.79	70.0
20	0.10 x W	47.94	0.0

5.1.2.2.7 CF02 - Inrush Current Limiting

Test Procedures Reference: A8

The CF02 test was performed on the original power supply (CSTI Model 20041490-001, s/n 7017816), a prototype power supply (CSTI Model 20041490-001), a modified prototype power supply (CSTI Model 20041490-001), and a final production unit power supply with a fan (CSTI Model 200041490, s/n 7022652). The CF02 test was also performed on multiple unit configurations of 12 and 16 units at the Los Angeles ARTCC (ZLA) for 120 VAC only. FAA-G-2100F specifies that inrush current shall not exceed 12 times the steady state peak state for one cycle for a system less than 600 watts. The failures were documented in PTR-028. The following summarizes the results of CF02 testing:

1. Original Power Supply (CSTI Model 20041490-001, s/n 7017816) - All measured values were out of specification.

2. Prototype Power Supply (CSTI Model 20041490-001) - All measured values were out of specification.

3. Modified Prototype Power Supply (CSTI Model 20041490-001) - The 120 VAC range was within specification. The measured values for 208 and 240 VAC were out of specification.

4. Final Production Unit Power Supply with a fan - For the single unit test (CSTI Model 20041490, s/n 7022652), the measured values for 120 and 208 VAC were within

specification. The 240 VAC range was out of specification. For multiple unit systems (12 and 16 units), the measured value for 120 VAC was within specification.

The CF02 detailed power supply test results are summarized in the following table:

	Original Inrush Current		Prototype Inrush Current		Modified Prototype Inrush Current	
Voltage	Measured Value	Max Allowed	Measured Value	Max Allowed	Measured Value	Max Allowed
120	**5.31**	4.68	**11.67**	10.32	4.04	6.78
208	**9.84**	4.68	**13.64**	5.64	**7.33**	4.5
240	**11.25**	5.64	**18.18**	5.64	**9.53**	5.64

	Production Unit Inrush Current		Production Unit (12 Unit Test) Inrush Current		Production Unit (16 Unit Test) Inrush Current	
Voltage	Measured Value	Max Allowed	Measured Value	Max Allowed	Measured Value	Max Allowed
120	4.5	6	28.8	54.6	40.6	86.4
208	3.43	5.22				
240	**5.25**	3.92				

Note: Voltage values are in VAC. Measured Value and Max Allowed inrush current values are in amps. Out of specification values are in **Bold** type.

5.1.2.2.8 CF03 - Control Facility Power Factor

Test Procedures Reference: A9

The CF03 test was performed on the original power supply, a prototype power supply, a modified prototype power supply, and a final production unit power supply with a fan. The test was also performed on multiple unit systems of 12 and 16 units at the Los Angeles ARTCC. FAA-G-2100F specifies that Power Factor has to be better than 0.7 for equipment less than 2000 watts. Failures were documented in PTR-028. The following summarizes the results of CF03 testing:

Settings	Condition	Composite Score
Configuration #3	Uplink (0 dBm)	**87.4**
	Downlink (0 dBm)	**86.9**
Interim	Uplink (-8 dBm)	**84.8**
	Downlink (-8 dBm)	**83.8**
Configuration #2	Uplink (-8 dBm/VOX/Mod)	**87.6**
	Downlink (-8 dBm/VOX/Mod)	**87**

Note: Out of specification values are in **Bold** type.

3. For the third set of voice recordings, a Match-Maker MM-100 bi-directional interface was used to match impedance and levels between the RCE and Panasonic SV-3700 DAT decks. Testing was performed using Configuration #2 and #3 Telco parameter settings. Neither configuration with the MM-100 met the voice quality requirement, this was documented in PTR-016.

	Configuration #2	Configuration #3
Telco	-8 dBm	0 dBm
VOX	-43 dBm	-40 dBm
Modem	-23 dBm	-15 dBm
Attack	0 msec	10 msec
Decay	500 msec	100 msec
Auto Mute	Disabled	Disabled

Settings	Condition	Composite Score
Configuration #2	Uplink (-8 dBm) - MM-100	**87.4**
	Downlink (-8 dBm) - MM-100	**86.7**
Configuration #3	Uplink (0 dBm/VOX/Mod) - MM-100	**86.8**
	Downlink (0 dBm/VOX/Mod) - MM-100	**86.5**

Note: Out of specification values are in **Bold** type.

4. For the fourth set of voice recordings a Match-Maker MM-100 bi-directional interface was used to match impedance and levels between the production unit RCEs and Panasonic SV-3700 DAT decks. Testing was performed using Configuration #4 Telco parameter settings. This configuration with the MM-100 did not meet the voice quality requirement, in addition the Composite scores were lower than the third set of voice recordings.

5.1.2.2.9 VH01 - Voice Quality

Test Procedures Reference: A10

The VH01 test results are summarized in the following:

1. For the first set of voice recordings, the equipment was aligned for a -13 dBm test tone across the Telco using the default CSTI settings (Configuration #1). None of the scores met the voice quality requirement, this was documented in PTR-016.

	Configuration #1
Telco	-13 dBm
VOX	-30 dBm
Modem	-28 dBm
Attack	10 msec
Decay	100 msec
Auto Mute	Disabled

Condition	Composite Score
CSTI - C - Downlink	**74.5**
CSTI - C - Uplink	**78.6**

Note: Out of specification values are in **Bold** type.

2. For the second set of voice recordings, the equipment was tested with three Telco parameter settings. For the first two settings, the equipment was aligned for 0 dBm and -8 dBm test tones across the Telco using default CSTI settings (Configuration #3 and Interim). The third setting was a -8 dBm test tone with new CSTI parameters (Configuration #2). None of the configurations met the voice quality requirement, this was documented in PTR-016.

	Configuration #3	Interim	Configuration #2
Telco Level	0 dBm	-8 dBm	-8 dBm
VOX	-40 dBm	-40 dBm	-43 dBm
Modem	-15 dBm	-23 dBm	-23 dBm
Attack	10 msec	10 msec	0 msec
Decay	100 msec	100 msec	500 msec
Auto Mute	Disabled	Disabled	Disabled

Modified Prototype Power Supply (CSTI Model 20041490-001)

	120 VAC	208 VAC	240 VAC
Voltage	119.8 VAC	207.5 VAC	239.6 VAC
Current	220 mA	150 mA	150 mA
Power	26.75 va	31.66 va	34.99 va
Voltage Threshold	0.1%	0.1%	0.1%
Current Threshold	15.0%	28.1%	29.7%
Power Factor	0.95	0.76	**0.68**

Note: Out of specification values are in **Bold** type.

Final Production Unit Power Supply with a fan (CSTI Model 20041490, s/n 7022652)

Single Unit Test	120 VAC	208 VAC	240 VAC
Voltage	120.5 VAC	208.9 VAC	241.0 VAC
Current	250 mA	160 mA	150 mA
Power	29.99 va	33.14 va	36.48 va
Voltage Threshold	0.1%	0.1%	0.1%
Current Threshold	8.3%	16.2%	22.8%
Power Factor	0.99	0.87	0.83

Multiple Unit Test at 120 VAC	12 Unit Test	16 Unit Test
Voltage	118.0 VAC	118.0 VAC
Current	3.12 amps	4.08 amps
Power	368.5 va	481.7 va
Voltage Threshold	3.9%	3.8%
Current Threshold	8.6%	8.6%
Power Factor	1.0	1.0

Note: Out of specification values are in **Bold** type.

1. Original Power Supply (CSTI Model 20041490-001, s/n 7017816) - Only 120 VAC passed the Power Factor specification. The 208 and 240 VAC ranges were not in specification.

2. Prototype Power Supply (CSTI Model 20041490-001) - All three ranges (120, 208, and 240 VAC) pass the Power Factor specification.

3. Modified Prototype Power Supply (CSTI Model 20041490-001) - The 120 and 208 VAC ranges passed the Power Factor specification. The 240 VAC range was not in specification.

4. Final Production Unit Power Supply with a fan - The 120, 208, and 240 VAC ranges passed the Power Factor specification. The 12 and 16 unit systems passed the Power Factor specification at 120 VAC.

The CF03 detailed Power Factor test results are summarized in the following tables:

Original Power Supply (CSTI Model 20041490-001, s/n 7017816)

	120 VAC	208 VAC	240 VAC
Voltage	119.8 VAC	207.7 VAC	239.6 VAC
Current	128 mA	124 mA	140 mA
Power	15.36 va	25.72 va	33.66 va
Voltage Threshold	0.1%	0.1%	0.1%
Current Threshold	23.9%	58.7%	55.3%
Power Factor	0.89	**0.44**	**0.33**

Note: Out of specification values are in **Bold** type.

Prototype Power Supply (CSTI Model 20041490-001)

	120 VAC	208 VAC	240 VAC
Voltage	119.8 VAC	207.8 VAC	239.6 VAC
Current	220 mA	147 mA	140 mA
Power	26.34 va	25.53 va	33.44 va
Voltage Threshold	0.1%	0.1%	0.1%
Current Threshold	14.7%	28.0%	31.9%
Power Factor	0.98	0.84	0.76

Note: Out of specification values are in **Bold** type.

	Configuration #4
Telco	-8 dBm
VOX	-40 dBm
Modem	-23 dBm
Attack	10 msec
Decay	100 msec
Auto Mute	Disabled

Settings	Condition	Composite Score
Configuration #4	Uplink (-8 dBm/Default) - MM-100	**84.5**
	Downlink (-8 dBm/Default) - MM-100	**82.4**

Note: Out of specification values are in **Bold** type.

5.1.2.2.10 EI02-LB - Longitudinal Balance

Test Procedures Reference: A11

The results of EI02-LB testing are contained in the following tables:

Tested Port

Control Unit	Vs	Vm	LB (dB)
Main Audio #1 TX	0.740900	0.000116	76.11
Main Audio #1 RX	0.740920	0.000520	63.08
Main Audio #2 TX	0.740910	0.000129	75.18
Main Audio #2 RX	0.740900	0.000570	62.28
STBY Audio #1 TX	0.740920	0.000124	75.53
STBY Audio #1 RX	0.740900	0.000555	62.51
STBY Audio #2 TX	0.740910	0.000128	75.25
STBY Audio #2 RX	0.740900	0.000562	62.40

Remote Unit	Vs	Vm	LB (dB)
Main Audio #1 TX	0.740940	0.000712	60.35
Main Audio #1 RX	0.740906	0.000640	61.27
STBY Audio #1 TX	0.740950	0.001152	56.17
STBY Audio #1 RX	0.740950	0.000724	60.20
Main Audio #2 TX	0.740950	0.001196	55.84
Main Audio #2 RX	0.740910	0.000618	61.58
STBY Audio #2 TX	0.740940	0.001105	56.53
STBY Audio #2 RX	0.740970	0.000861	58.70

Telco Ports

Control Unit	Vs	Vm	LB (dB)
Trunk #1 Pri RX	0.740840	0.000027	88.77
Trunk #1 Sec RX	0.773650	0.000125	75.83
Trunk #2 Pri RX	0.740840	0.000031	87.57
Trunk #2 Sec RX	0.773550	0.000120	76.19

Remote Unit	Vs	Vm	LB (dB)
Trunk #1 Pri RX	0.740860	0.011430	88.52
Trunk #1 Sec RX	0.773560	0.000635	61.71
Trunk #2 Pri RX	0.740890	0.013070	85.52
Trunk #2 Sec RX	0.773640	0.000597	62.25

5.1.2.2.11 IT01 - PTT (M/S) Transfer Inhibit

Test Procedures Reference: A12

The results of IT01 testing showed the equipment exhibited no anomalies during the test.

5.1.2.2.12 LR01 - LRU Removal and Insertion

Test Procedures Reference: A13

The results of LR01 testing showed the equipment exhibited no anomalies during the test.

5.1.2.2.13 MN01 - Front Panel Status Indicators

Test Procedures Reference: A14

The results of MN01 testing follow: This test was performed on December 12, 1994. The Remote RCE failed this test due to the lack of a Mute/Unmute status indicator (**shall**$_{71}$). This was documented in PTR-009, however vendor variances were accepted by the Program Office.

5.1.2.2.14 MN02 - Front Panel Maintenance Control

Test Procedures Reference: A15

The results of MN02 testing follow: The RCE did not provide front panel maintenance control of the Mute/Unmute function. This was documented in PTR-008. However, the front panel maintenance control of the Mute/Unmute function was not an explicit requirement of FAA-E-2885, therefore the PTR was closed.

5.1.2.2.15 MN03 - Voice Access Jacks

Test Procedures Reference: A16

The equipment exhibited the following anomalies during this test: The RCE equipment did not provide separate access jacks for line, monitor, and drop. The RCE unit only provides monitor and drop access jacks. The line access jack functionality is provided by the monitor access jack with another dummy bantam plug inserted into the drop access jack.

5.1.2.2.16 DR01-C - Dry Relay Contact Parameters

Test Procedures Reference: A17

First and Second OT&E Efforts - The results of DR01 testing showed no anomalies during the test. The results do not include the new Relay Interface Module (RIM) card.

Third OT&E Effort - The results of DR01 testing of the final production units showed no anomalies during the test. The results include the new Relay Interface Module (RIM) card.

5.1.2.2.17 ER03 - Output Short Circuit

First and Second OT&E Efforts - All of the VSCE interface outputs passed the short circuit test, except for the 12 VDC signal which was not tested. The Remote interface outputs responsible for selection of Standby transmitters and receivers (ATR circuit) failed this test The failed tests points were:

1. Standby Transmitter Select Freq 1
2. Standby Transmitter Select Freq 2
3. Standby Receiver Select Freq 1
4. Standby Receiver Select Freq 2

The preceding test points failed to function after a short to ground was applied to the Standby Transmitter Select Freq 1 output. This failure was identical to the failure documented in PTR-006.

Third OT&E Effort - The ATR circuits were modified to a current sink, therefore this test no longer applies to the following test points:

1. Standby Transmitter Select Freq 1
2. Standby Transmitter Select Freq 2
3. Standby Receiver Select Freq 1
4. Standby Receiver Select Freq 2

The ATR circuits were tested to verify that they could sink 100 mA at 24 VDC.

The ATR circuits were modified to a current sink and therefore require an external 24 VDC power source to operate. The ER01-B test fixture shown in Figure 4-4 was modified to test the 24 VDC power supply of the Remote RCE to verify that it could supply 24 VDC at 600 mA. The short circuit test was performed on the 12 and 24 VDC power supplies of the Control and Remote units, respectively. No problems or anomalies were encountered during testing.

the weight of the cable assemblies pulled a connector loose. This was documented in PTR-019.

5. All cables connectors contain strain relief, there was no strain relief provided for any cable. This was documented in PTR-019.

Third OT&E Effort - The results of MC03 testing follow:

1. One mating connector for each connector on the chassis, no anomalies detected.

2. All connectors mechanically keyed, no anomalies detected.

3. All energized power connections are female, no anomalies detected.

4. All connectors on cables are mechanically retained in place when connected, no anomalies detected.

5. All cables connectors contain strain relief, no anomalies detected.

5.1.2.3.5 MC04 - Protective Covers Inspection

Test Procedures Reference: A22

First and Second OT&E Effort - The results of MC04 testing follow: The RCE equipment was delivered without protective covers for any of the electrical interfaces. This was documented in PTR-003.

The RCE units have the following electrical interface connectors subject to user access when in normal operation: Two of the four extended 96 pin male signal (audio, control, and Telco) interface connectors located on the rear of the unit.

1. The top two connectors will interface to the VSCE/RCAG equipment.

2. The bottom two connectors could be utilized for the same functionality as the top two electrical interface connectors, however, in the RCE configuration they will not be utilized.

The bottom two connectors (2AJ1 and 2AJ2) will be left exposed in the RCE configuration. These connections provide direct access to the +12 VDC and +24 VDC power rails. Conversations with CSTI indicated that the +24 VDC power supply was capable of providing up to 1.6 amps of current. Since the RCE equipment is 1.75 inches in height, and the units will probably be stacked on top of each other, the amount of room for the technician installing or repairing the equipment, to access the active connector would only be about 1.25 inches. This means that the technician would be exposed to a potentially hazardous condition. This discrepancy was witnessed during FUAT, brought to the attention of CSTI,

The workstation servers as the centrally located operator interface for the RCE control and monitoring system. It is based on an IBM 486 compatible machine and runs the RCE Application software. The operation interface is based on Microsoft Windows.

The communication servers are rack located computers that provide RCE polling to monitor for status. The workstation is interfaced with communication servers via an Ethernet LAN (local area network). The coaxial LAN cable provides a simple rack to rack and/or rack to workstation electrical interface. Multiple communication servers can be connected to the workstation over the LAN. Each communication server is outfitted with one or more serial port units. The base communication server comes with one 16 port interface unit. Each serial port expansion kit adds another 16 ports to the base computer. Up to 3 add-on kits can be integrated with the communication server to supply a total of 64 serial ports.

Each serial port services up to 8 RCE channels. This multi-drop implementation of RS-232 is possible because tristateable drivers are used within the RCE. The communication server transmit messages to all units on a serial port interface. The RCE unit with the matching address (contained in the message) activates its RS-232 drivers and sends an appropriate response.

If a communication server is fully loaded with serial port expansion kits and each serial port services 8 RCE units, the 512 channels can be supported from a single communication server.

*(1 comm server) * (64 serial ports/comm server) * (8 channels/serial port) = 512*

While the analysis indicates a capability of the Communications Server to service 512 RCE channels, a typical electrical rack will accommodate approximately 36 RCE channels (this does not account for the area required by the Communications Server). If the RCE system was implemented as described by the above analysis, 15 electrical racks would be required to fully utilize the Communications Server capability.

5.1.2.3.4 MC03 - Cable Connector Inspection

Test Procedures Reference: A21

First and Second OT&E efforts - The results of MC03 testing follow:

1. One mating connector for each connector on the chassis, no anomalies detected.

2. All connectors mechanically keyed, while performing maintenance P1(A1J2) and P2(A1J1) were inadvertently swapped. This was documented in PTR-002.

3. All energized power connections are female, no anomalies detected.

4. All connectors on cables are mechanically retained in place when connected, while the cable connector provided a locking mechanism to retain it in place, on several occasions

5.1.2.3.1 AC01 - AC Line Controls

Test Procedures Reference: A18

The results of AC01 testing exhibited the following anomalies:

The test consisted of verifying that the AC line switch opened the AC line immediately after entering the RCE unit. The RCE does not provide an AC line indicator. However, when the power supply is working correctly, the +24 VDC PRI indicator can used to verify that the AC line is providing power.

CSTI Exception Accepted by FAA:

Shall$_{144}$ - AC Line Controls, Our equipment is compliant with all aspect of this requirement except we provide no front panel AC power light. Refer to Volume II paragraph 3.3.1.1.1.2, page II-3-15, for more detail.
Benefit: This feature is beneficial to the Government because it avoids the use of a jumper or switch for input AC voltage selection.

5.1.2.3.2 GN02 - Ground

Test Procedures Reference: A19

The results of GN02 testing showed the RCE unit provided a lug capable of accepting a No. 14 AWG ground wire.

5.1.2.3.3 MC02 - Interconnection Cable Inspection

Test Procedures Reference: A20

The results of MC02 testing follow: All cables required for interconnection of the RCE equipment were provided. The only cable assembly compatible (i.e. plenum rated) with facilities provided by the Government is the cable assembly interconnecting the CMT and the Communications Server (CSS). Therefore, each electrical rack assembly would require its own CSS to operate. If the RCE was implemented with one CSS per rack, the implementation cost would escalate, and would be extremely inefficient in terms of utilizing the capabilities of the CSS.

The following is an excerpt from the FUAT Test Procedure Volume 2: Appendices, Appendix A: Analyses, Analysis #1: CMT 350 Channel Capability:

The CMT includes a workstation, communication server(s), serial port expansion kits and interface cables. An overview of the CMT design is first presented. Then an analysis of the 350 channel support is presented.

5.1.2.3 Inspections

Checklist for Phase 1: RCE Testbed Inspection Tests

TEST - Label and Description		First and Second OT&E Efforts P/F	PTR(s)	Third OT&E Effort P/F	PTR(s)
AC01	AC Line Controls	P		N/A	
GN02	Ground	P		N/A	
MC02	Interconnection Cable Inspection	P		P	
MC03	Cable Connector Inspection	F	002, 019	P	
MC04	Protective Covers Inspection	F	003, 048	P	
MN03	Voice Access Jacks	P		N/A	
EI02-SA	Telephone Line Receive/Transmit Separate Adjust	P		N/A	

and noted in the Test Log. Subsequent conversations with CSTI personnel have indicated that CSTI had been investigating some possible protective covers for use. The manufacturer provided protective covers (ECN1322) for the bottom two connectors (2AJ1 and 2AJ2) not used in the RCE configuration. The paper label tape provided as part of the ECN to hold the protective covers in place peels away after approximately 60 days of use. This was documented in PTR-048.

Third OT&E Effort - The plastic tape substituted for the paper label tape is adequate to keep the protective covers in place.

5.1.2.3.6 MN03 - Voice Access Jacks

Test Procedures Reference: A23

The MN03 test results displayed the following equipment anomalies: The RCE equipment did not provide separate access jacks for line, monitor, and drop. The RCE unit only provides monitor and drop access jacks. The line access jack functionality is provided by the monitor access jack with another dummy bantam plug inserted into the drop access jack.

5.1.2.3.7 EI02-SA - Telephone Line Receive/Transmit Separate Adjust

Test Procedures Reference: A24

The EI02-SA test results displayed the following: Inspection of both the MDT and CMT revealed separate adjustments for the Telco transmit level and Telco receiver level.

5.1.2.4 Miscellaneous

Checklist for Phase 1: RCE Testbed Miscellaneous Tests

TEST - Label and Description		First and Second OT&E Efforts		Third OT&E Effort	
		P/F	PTR(s)	P/F	PTR(s)
LN01	Leased Interfacility NAS Communications System (LINCS)	F	020	P	
CN01	Separate Receiver and Transmitter Site Configuration	F	032	P	
CN02	Alternate Configurations, Priority/Non-Priority Mode	P		P	
SC02	Transmission Path Loss	F	038	P	
BI01	Burn-In Testing	P		P	

5.1.2.4.1 LN01 - Leased Interfacility NAS Communications System (LINCS)

Test Procedures Reference: A25

5.1.2.4.1.1 Simulated LINCS Test

This test was not possible because the RCE channel was unable to achieve the proper data modem lock condition necessary to maintain communications utilizing the Automated Testbed's simulated LINCS VG6 transmission path. Therefore the following tests were not performed, the Timing test, TM01-B, and the Single Channel Operational test, SC01. This was documented in PTR-020.

5.1.2.4.1.2 Philadelphia Analog Cross Patch LINCS Test

This test was not performed because data modem lock could not be achieved utilizing the cross patched LINCS lines between building 176 and Philadelphia International Airport (PHL).

The vendor expressed a concern about envelope delay in the cross patched line. Further testing (characterization) of the LINCS VG6 lines revealed that the cross patched lines to PHL met the requirements of VG6 (804 Hz - 2604 Hz $\leq$ 650 µsec). The LINCS VG6 specification does not specify the envelope distortion delay characterization above 2604 Hz. Refer to Figure 5-1 for a characterization of the cross patched LINCS lines from building 176 to PHL for the envelope delay parameters.

5.1.2.5.1.3 New York TRACON Digital Cross Patch Test

The LINCS VG6 lines achieved proper data modem lock when the lines were digitally cross patched at the New York TRACON. Successful functional testing was performed utilizing front panel commands.

5.1.2.5.1.4 Philadelphia End-to-End LINCS Test

The Philadelphia end-to-end LINCS test was conducted during the Third OT&E effort. The LINCS VG6 line achieved proper data modem lock between the Control RCE at PHL and the Remote RCE at building 176. Successful functional testing was performed utilizing front panel commands and audio tones.

5.1.2.4.2 CN01 - Separate Receiver and Transmitter Site Configuration

Test Procedures Reference: A26

The Separate Receiver and Transmitter Site Configuration test was conducted for Configuration's #3 and #4. The results are as follows:

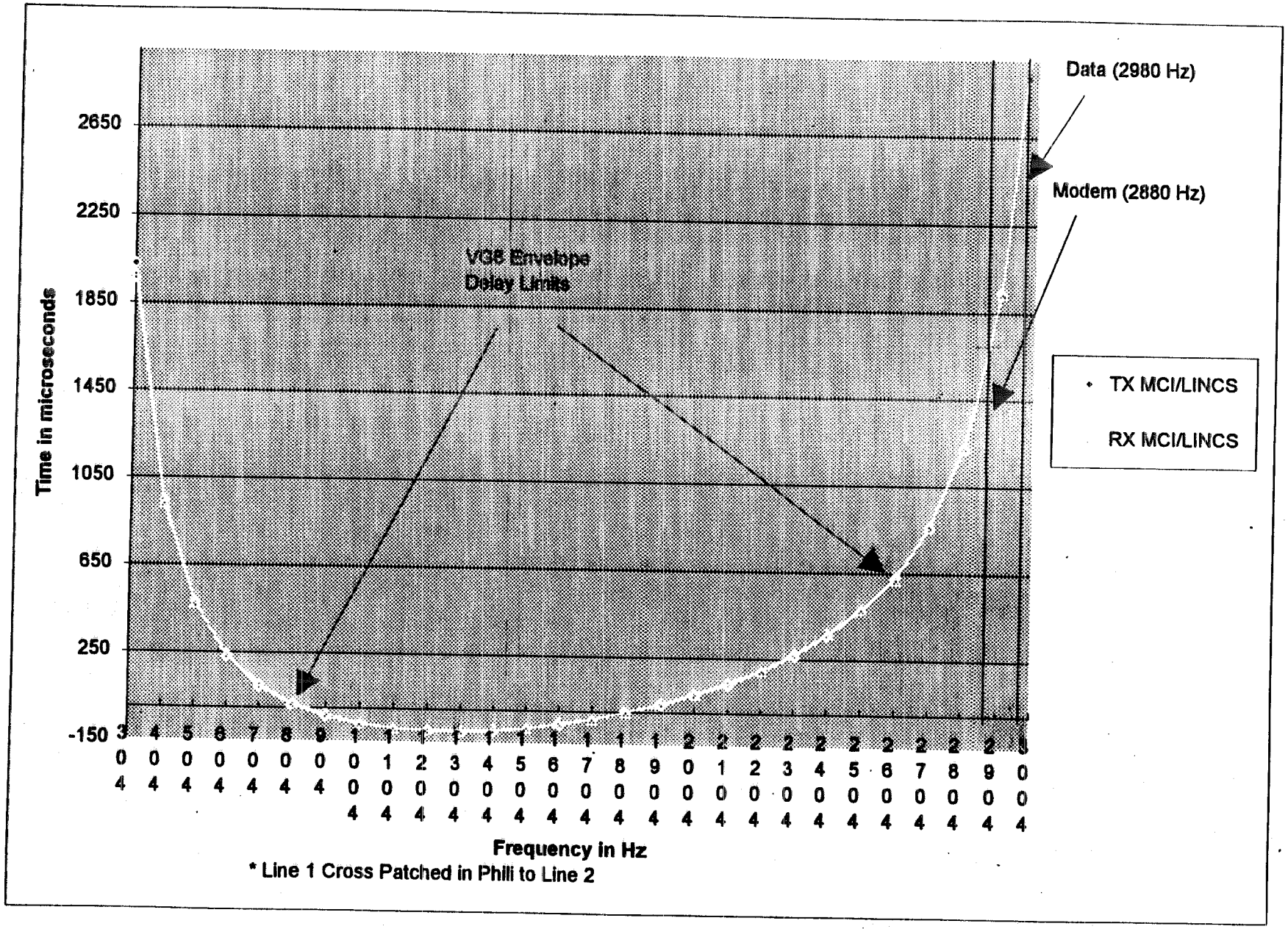

Figure 5-1 LINCS elope Delay Distortion

5.1.2.5 CT01- Certifications

Checklist for Phase 1: RCE Testbed Certifications - CT01

CT01 Certifications	**Method of Verification**	**Comments**
Front Panel FAA Maintenance Data Terminal (MDT) Interface (**shall**$_{75}$)	Vendor Analysis	Note 1
Reliability, Maintainability, and Availability (**shalls**$_{117\text{-}123}$, **should**$_{24,25}$)	Reverified by APMO	Because of hardware changes, the outcome of Reliability was re-evaluated (PTR-066).
Service Life, General (**shall**$_{124}$)	Vendor Documentation	A ten year service warranty has been provided by the vendor.
Mechanical (**shall**$_{125}$)	Inspection	Note 2
Mechanical Requirements (**shall**$_{151}$)	Vendor Assures Compliance	Meets the requirements of FAA-G-2100E.
Radio Control Signal Error Rate (**should**$_{17}$)	Vendor Analysis	Note 3
Operating (**shall**$_{126}$)	Vendor Assures Compliance	Note 4
Non-Operating (**shall**$_{127\text{-}128}$)	Vendor Assures Compliance	Note 5
Transportation (**shall**$_{129\text{-}130}$)	Inspection	The packing material and shipping methods are standard for electronic equipment.
Control Facility RCE Power Requirements (**shall**$_{136}$)	Tested, Failed	Note 6
Grounding, Bonding, Shielding, and Transient Protection (**should**$_{26}$)	Vendor Assures Compliance	Vendor reported that G/B/S requirements comply with FAA-STD-020A.
Interconnection Cables (**shalls**$_{154\text{-}155}$)	Inspection	The cables may be eliminated, reference Section 5.1.2.3.3.
Materials (**shalls**$_{163\text{-}164}$)	Vendor Assures Compliance	Note 7
Toxicity (**shall**$_{165}$)	Vendor Assures Compliance	Note 7

(3 seconds to re-establish communications and 3 seconds for restoration of command). The results of SC02 testing follow:

Test Iteration	Data	Results
1	3.60 sec	Passed
2	5.50 sec	Passed
3	2.30 sec	Passed
4	4.30 sec	Passed
5	4.10 sec	Passed
6	4.30 sec	Passed
7	3.40 sec	Passed
8	3.40 sec	Passed
9	4.30 sec	Passed
10	3.60 sec	Passed

5.1.2.4.5 BI01 - Burn-In Testing

Test Procedures Reference: A29

First and Second OT&E Efforts - Burn-In Testing was conducted for approximately 348 hours. This test was performed on the Type B interface configuration with the results stored in data files; B1172.R06, B1172.R07, B1172.R09 through B1172.R14, and B1172.R15 through B1172.R20. There were no RCE related failures during the test.

Third OT&E Effort - Burn-In Testing was conducted for approximately 181 hours. This test was performed on the Type B interface configuration with the results stored in data files; P1172.R02 through P1172.R09. There were no RCE related failures during the test.

5.1.2.4.3 CN02 - Alternate Configurations, Priority/Non-Priority Mode

Test Procedures Reference: A27

Second OT&E Effort - The RCE specification requires the equipment to provide Lockout and Frequency Override capabilities at Dual Control Facilities. The dual control configurations (non-priority and priority modes) have been validated in accordance with the FAA-E-2885 specification. It should be noted that the specification does not provide details.

Third OT&E Effort - Testing was performed on RCE final production units. The dual control configurations (non-priority and priority modes) have been validated in accordance with the FAA-E-2885 specification.

5.1.2.4.4 SC02 - Transmission Path Loss

Test Procedures Reference: A28

Second OT&E Effort - The results of SC02 testing follow: The channel failed 6 out of 10 test iterations while trying to (re)establish the Telco transmission path. The results are summarized in the following table:

Test iteration	Data	Results
1	4.17 sec	Failed
2	2.25 sec	Passed
3	3.82 sec	Failed
4	3.92 sec	Failed
5	3.32 sec	Failed
6	2.69 sec	Passed
7	3.75 sec	Failed
8	3.91 sec	Failed
9	2.81 sec	Passed
10	2.34 sec	Passed

This was documented in PTR-038.

Third OT&E Effort - Since the OT&E test team was unable to determine precisely when the re-establishment of communications took place, a full 6 seconds was allotted for this test case

Configuration #3 - The results of testing at 0 dBm Telco level follow:

The following automated tests results were obtained for the Type B interface configuration:

TEST	DATE	DATA FILE	RESULTS
TM01-B	3/7/95	S3002.R01	Passed
TM01-MB	3/10/95	S7102.R01	Passed
SC01	3/10/95	S1172.R03	Failed
TELCO_XX	3/8/95	S1192.R01	Passed

The following automated tests results were obtained for the Type C interface configuration:

TEST	DATE	DATA FILE	RESULTS
TM01-C	3/10/95	S5003.R02	Passed
SC01	3/10/95	S1173.R01	Passed
TELCO_XX	3/10/95	S1193.R01	Passed

The SC01 (Type B) failures occurred when a transmitter was keyed while its associated receiver was muted. The Control RCE then deasserted the Mute Confirm Signal to the VSCE. After the PTT was deactivated the audio path remained muted without the Control RCE providing the Mute Confirm Signal to the VSCE. This was documented in PTR-032. Type B timing and mute timing data are listed in Appendix B, pages B-5-1 to B-5-2. Type C timing data are listed in Appendix B, page B-5-3. Type B timing and mute timing data plots are in Appendix A, pages A-7-1 to A-7-6. Type C timing data plots are in Appendix A, pages A-7-7 to A-7-10.

Configuration #4 - The results of testing at -8 dBm/Default Telco level follow:

The following automated tests results were obtained for the Type B interface configuration:

TEST	DATE	DATA FILE	RESULTS
TM01-B	9/17/95	S3002.R01	Passed
TM01-MB	9/17/95	S7102.R01	Passed
SC01	9/17/95	S1172.R03	Passed
TELCO_XX	9/17/95	S1192.R01	Passed

Type B timing and mute timing data are listed in Appendix B, pages B-5-4 to B-5-5. Type B timing and mute timing data plots are in Appendix A, pages A-7-11 to A-7-16. There were no errors, failures or anomalies during this test.

5.2 Phase 2 - Radio Communication Link

5.2.1 Pass/Fail Data Sheet

Checklist for Phase 2: Radio Communication Link (RCL)

TEST - Label and Description		**First and Second OT&E Efforts**		**Third OT&E Effort**	
		P/F	**PTR(s)**	**P/F**	**PTR(s)**
RC01	Nominal RCL	P		P	
RC02	Degradation using RCL	P		P	
RC03	Low Density RCL (LDRCL)	P		P	

shall$_{171}$ cause EMI, or be affected by EMI from, at the site where it is installed. The follow up requirement is that the contractor **shall**$_{172}$ characterize the RCE in accordance with MIL-STD-461C, and **shall**$_{173\text{-}174}$ provide the characterized information. The characterization data provided by the vendor is ONLY for the Control DVC and Remote DVC. The Communications Server (CSS), CMT, and Digiboard components were not part of the data characterized. The documentation provided by the OEMs of the PC and Monitors used for the Communications Server and CMT indicate that they are both compliant with Part 15 of the FCC Class B equipment. The documentation provided by the Digiboard OEM indicates that the equipment has been tested and found to comply with the limits for Class A digital devices pursuant to Part 15 of the FCC Rules. Further investigation with EMC-300W group indicated that Part 15 FCC Class A and Class B equipment would probably satisfy the requirements of MIL-STD-461C.

Another area that may have to be revisited is the issue of EMI Characterization for the C-DVC. Since initial testing of the Control RCE units failed the power requirements and subsequently was updated with another power supply, the RCE system will have to be recharacterized in accordance with FAA-E-2885 specification requirements. The APMO has requested the vendor to have the RCE recharacterized and is awaiting the results.

Note 9: The FAA Evaluation Team deferred validation of this step to the Quality Reliability Officer (QRO). The QRO provided validation of this step during a meeting held on November 18, 1994 with COTR present.

CT01 Certifications	Method of Verification	Comments
Data Exchange Protocol (**should shalls**$_{252\text{-}254}$)	TBD	Certification test applicable to Phase VI.
Messages (**should shalls**$_{255\text{-}262}$)	TBD	Certification test applicable to Phase VI.
Addressing (**should shall**$_{263}$)	TBD	Certification test applicable to Phase VI.
ICD (**should shall**$_{73,\ 264}$, **should**$_{12e}$)	TBD	Certification test applicable to Phase VI.

Note 1: The MDT software was compiled and executed on CSTI's 80286 IBM AT compatible test computers. Refer to RCE System FUAT Doc. No. 20041485, Rev A November 13, 1994, Analysis number 3, FAA MDT Compatibility.

Note 2: The chassis and cards were examined to ensure successful operation even when the equipment was positioned at an angle of 5 degrees and when stored for one year. A member of the FAA Test Evaluation Team presented a concern of the DVC/JIC ribbon cables rubbing against the chassis due to chassis vibration. A concern was also expressed about the proximity of the RIM card to the chassis cover.

Note 3: The FAA Test Evaluation Team noted that CSTI had not asserted 1 million control signals on an automated tester. CSTI has not detected any false radio control command signals. CSTI's analysis presented compliance with this requirement from the point of view that the modem communication link was the weakest part of the Control site to Remote site link. CSTI's analysis evaluated the robustness of this link. Refer to RCE System FUAT Doc. No. 20041485, Rev A November 13, 1994, Analysis number 4, FAA MDT Compatibility.

Note 4: The equipment supports operating temperatures of 0 to +50 degrees Celsius, relative humidity at 20% to 80% and altitudes from sea level to +10,000 feet.

Note 5: The equipment supports non-operating temperatures of -50 to +70 degrees Celsius, relative humidity of 100% and altitudes from sea level to +50,000 feet.

Note 6: The C-RCE did not meet the 240 VAC Inrush Current requirements for FAA Order 2100F.

Note 7: Refer to RCE System FUAT Doc. No. 20041485, Rev A November 13, 1994, Analysis #5: Materials, Toxicity, Glass, Fungus & Finishes.

Note 8: The following contains information about the EMC characterization data submitted by the RCE vendor. The specification for the RCE system requires that no system delivered

CT01 Certifications	Method of Verification	Comments
Glass (**shalls**$_{166-167}$)	Vendor Assures Compliance	Note 7
Fungus (**shall**$_{168}$)	Vendor Assures Compliance	Note 7
Finishes (**shall**$_{169}$)	Vendor Assures Compliance	Note 7
Interchangeability (**shall**$_{170}$)	Vendor Assures Compliance	Note 7
Electromagnetic Compatibility - EMC (**shall**$_{171}$)	Waiting for Vendor data.	Note 8 (PTR-067)
EMC Characterization (**shalls**$_{172-174}$)	Waiting for Vendor data.	Note 8 (PTR-067)
Electrostatic Discharge Protection (**shoulds**$_{27-29}$)	Vendor Assures Compliance	All exposed surfaces are connected to chassis ground . **Shoulds**$_{28-29}$ are not required for the Master Test Plan.
Safety (**shall**$_{175}$)	Vendor Assures Compliance	The RCE compiles with OSHA and the NEC standards.
Quality Assurance (**shall**$_{176}$)	Vendor Assures Compliance	Note 9
Remote Monitoring and Alarm Notification (**should shalls**$_{233-240}$)	TBD	Certification test applicable to Phase VI.
Automatic Recording and Retrieval (**should shalls**$_{241-243}$)	TBD	Certification test applicable to Phase VI.
System Security (**should shalls**$_{244-245}$)	TBD	Certification test applicable to Phase VI.
MPS/CMT (**should shall**$_{246}$)	TBD	Certification test applicable to Phase VI.
Mechanical Interface (**should shall**$_{247}$)	TBD	Certification test applicable to Phase VI.
Electrical Characteristics (**should shalls**$_{248-251}$)	TBD	Certification test applicable to Phase VI.

5.2.2 Summary Descriptions

5.2.2.1 RC01 - Nominal RCL

Test Procedures Reference: B1

The results of RC01 testing follow: The RCE equipment exhibited no anomalies during the First OT&E effort testing. RC01, RC02, and RC03 were executed as a single subtest during the Second OT&E and Third OT&E efforts with no anomalies.

5.2.2.2 RC02 - Degradation using RCL

Test Procedures Reference: B2

The results of RC02 testing follow: The RCE equipment exhibited no anomalies during the First OT&E effort testing. RC01, RC02, and RC03 were executed as a single subtest during the Second OT&E and Third OT&E efforts with no anomalies.

5.2.2.3 RC03 - Low Density RCL (LDRCL)

Test Procedures Reference: B3

The results of RC03 testing follow: The RCE equipment exhibited no anomalies during the First OT&E effort testing. RC01, RC02, and RC03 were executed as a single subtest during the Second OT&E and Third OT&E efforts with no anomalies.

5.3 Phase 3 - Radio Transmitter/Receiver Interface

5.3.1 Pass/Fail Data Sheet

Checklist for Phase 3: Radio Transmitter/Receiver Interface

TEST - Label and Description		P/F	PTR No.
RM01	Motorola Radio units - PTT Keying	P	
RM02	Motorola Radio Units - Audio Tone/Modulation/RF Power	F*	021
RM03	Motorola Radio Units - Power Configurations	F*	021
RI01	ITT Ground Remote Receiving (AN/GRR) and Ground Remote Transmitter (AN/GRT) units - PTT Keying	P	
RI02	ITT Ground Remote Receiving (AN/GRR) and Ground Remote Transmitter (AN/GRT) units -Audio Tone/Modulation/RF Power	F*	021
RI03	ITT Ground Remote Receiving (AN/GRR) and Ground Remote Transmitter (AN/GRT) units - Power Configurations	N/A	

* The test used a ± 0.5 dB tolerance, however AOS-500 determined that a ± 2.0 dB tolerance was acceptable. Therefore RM02, RM03, and RI02 meet AOS-500's criteria.

5.3.2 Summary Descriptions

5.3.2.1 RM01 - Motorola Radio Units - PTT Keying

Test Procedures Reference: C1

The results of RM01 testing follow: There were no errors, failures or anomalies experienced during testing.

5.3.2.2 RM02 - Motorola Radio Units, Audio Tone/Modulation/RF Power

Test Procedures Reference: C2

The results of RM02 testing follow: The uplink audio tone at 300 Hz was 1.7 dB below specification. Also the uplink audio tone at 2400 Hz was 0.2 dB below specification. This was documented in PTR-021. PTR-021 was closed when AOS-500 determined that a ± 2.0 dB tolerance was acceptable.

5.3.2.3 RM03 - Motorola Radio Units - Power Configurations

Test Procedures Reference: C3

The results of RM03 testing follow: The RCE Channel passed these tests except for the audio output levels in the uplink direction which exceeded the minimum acceptable value at 300 hz. This was documented in PTR-021. PTR-021 was closed when AOS-500 determined that a ± 2.0 dB tolerance was acceptable.

5.3.2.4 RI01 - ITT Ground Remote Receiving (AN/GRR) and Ground Remote Transmitter (AN/GRT) Units - PTT Keying

Test Procedures Reference: C4

The results of RI01 testing follow: There were no errors, failures or anomalies during either of these two tests.

5.3.2.5 RI02 - ITT Ground Remote Receiving (AN/GRR) and Ground Remote Transmitter (AN/GRT) Units - Audio Tone/Modulation/RF Power

Test Procedures Reference: C5

The results of RM02 testing follow: The uplink audio tone at 300 Hz was 1.7 db below specification. Also the uplink audio tone at 2400 Hz was 0.2 dB below specification. This was documented in PTR-021. PTR-021 was closed when AOS-500 determined that a ± 2.0 dB tolerance was acceptable.

5.3.2.6 RI03 - ITT Ground Remote Receiving (AN/GRR) and Ground Remote Transmitter (AN/GRT) Units - Power Configurations

Test Procedures Reference: C6

This test was not performed since the RM03 Power Configurations test passed without any difficulties.

5.7 Unscripted/Characterization Tests

5.7.1 Pass/Fail Data Sheets

Checklist for Unscripted/Characterization Tests

TEST - Label and Description	First and Second OT&E Efforts		Third OT&E Effort	
	P/F	PTR(s)	P/F	PTR(s)
Small Tower Voice Switch (STVS)	P		N/A	
Rapid Deployment Voice Switch (RDVS)	N/A		P	
End-to-End Frequency Characterization of a RCE Channel (Uplink)				Note 1
Frequency Characterization of the RCE Modem		052		Note 1
Maintenance Data Terminal Compatibility	F	001, 013, 022, 026, 031, 033, 034, 037, and 047	F	033, 060, 061, 062, and 063
Central Maintenance Terminal Compatibility	F	039 thru 044	F	035, 054, 055, 056, 057, 058, and 059
RCE/BUEC Interface EMI	N/A		P	
Non-Linear Gain of RCE Audio Path	N/A		F	064

Note 1: Characterizations of the RCE, therefore P/F criteria not applicable

5.6 Phase 5b - Integrated A/G Test

5.6.1 Pass/Fail Data Sheets

Checklist for Phase 5b: Integrated A/G Test, Jacksonville ARTCC

TEST - Label and Description		P/F	PTR (s)
VS03	Integrated A/G Operational Test	P	

5.6.2 Summary Descriptions

5.6.2.1 VS03 - Integrated A/G Operational Test

Test Procedures Reference: E2

WECO Type B interface - No Anomalies were detected at -8 dBm Telco levels. Receiver muting assertion was mapped in the RCE to the assertion of PTTs.

5.5 Phase 5a - Voice Switching and Control Equipment

5.5.1 Pass/Fail Data Sheets

Checklist for Phase 5a: Integrated Air/Ground Test, FAA Technical Center

TEST - Label and Description		First and Second OT&E Efforts P/F	PTR(s)	Third OT&E Effort P/F	PTR(s)
VS02	VSCE	P		P	

5.5.2 Summary Descriptions

5.5.2.1 VS02 - VSCE

Test Procedures Reference: E1

The results of the Second and Third OT&E efforts of VS02 testing indicated that no anomalies were detected. More detailed results follow for each VSCE type:

WECO

Type B - No Anomalies were detected. Mute assertion capabilities were not available.
Type C - No Anomalies were detected.

ICSS

Type C - Testing was performed with the Quad PTT/Audio configuration (Refer to Section 3.2.7). No Anomalies were detected. Backup PTT Functionality was verified. ICSS was not tested during the Third Effort OT&E testing.

VSCS

Type B - No Anomalies were detected.
Type C - No Anomalies were detected. However, RCE does not provide the VOX functionality of typical Type C equipment. The Program Management Office has indicated that an upcoming ECN will incorporate the VOX signaling/indications required to more fully emulate typical Type C equipment. This was documented in PTR-068.

5.4 Phase 4 - Voice Switching and Control Equipment

5.4.1 Pass/Fail Data Sheets

Checklist for Phase 4: Voice Switching and Control Equipment

TEST - Label and Description	P/F	PTR(s)
VS01 VSCE	P	

5.4.2 Summary Descriptions

5.4.2.1 VS01 - VSCE

Test Procedures Reference: D1

The results of VS01 testing indicated that no anomalies were detected at -8 dBm Telco levels. More detailed results follow for each VSCE type:

WECO

Type B - No Anomalies were detected. Mute assertion capabilities were not available.
Type C - No Anomalies were detected.

ICSS

Type C - Testing was performed with the Quad PTT/Audio configuration (Refer to Section 3.2.7). No Anomalies were detected. Backup PTT Functionality was verified.

VSCS

Type B - No Anomalies were detected.
Type C - No Anomalies were detected. However, RCE does not provide the VOX functionality of typical Type C equipment. The Program Management Office has indicated that an upcoming ECN will incorporate the VOX signaling/indications required to more fully emulate typical Type C equipment. This was documented in PTR-068.

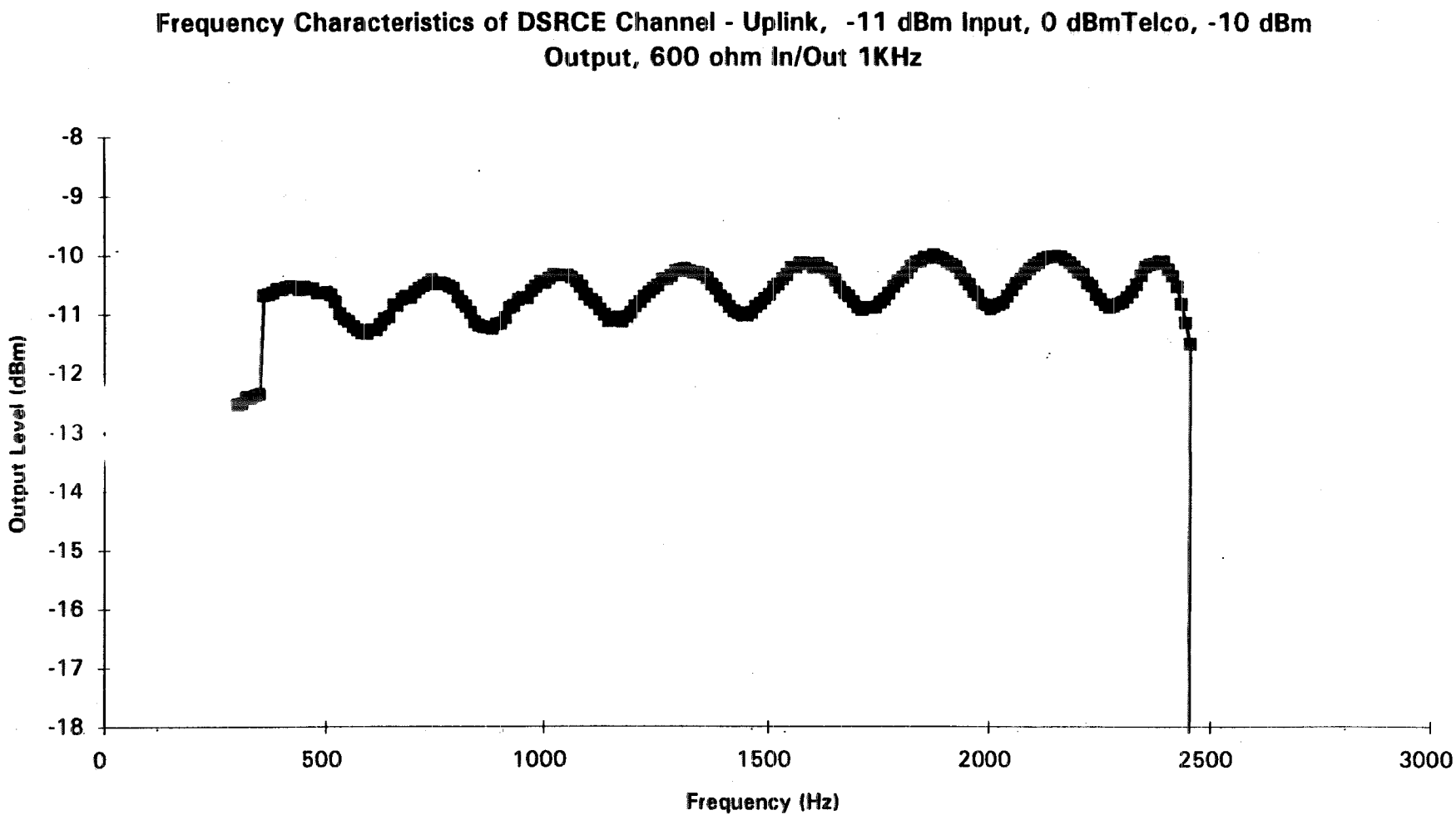

Figure 5-4 End-to-End Frequency Characteristics (-11 dBm)

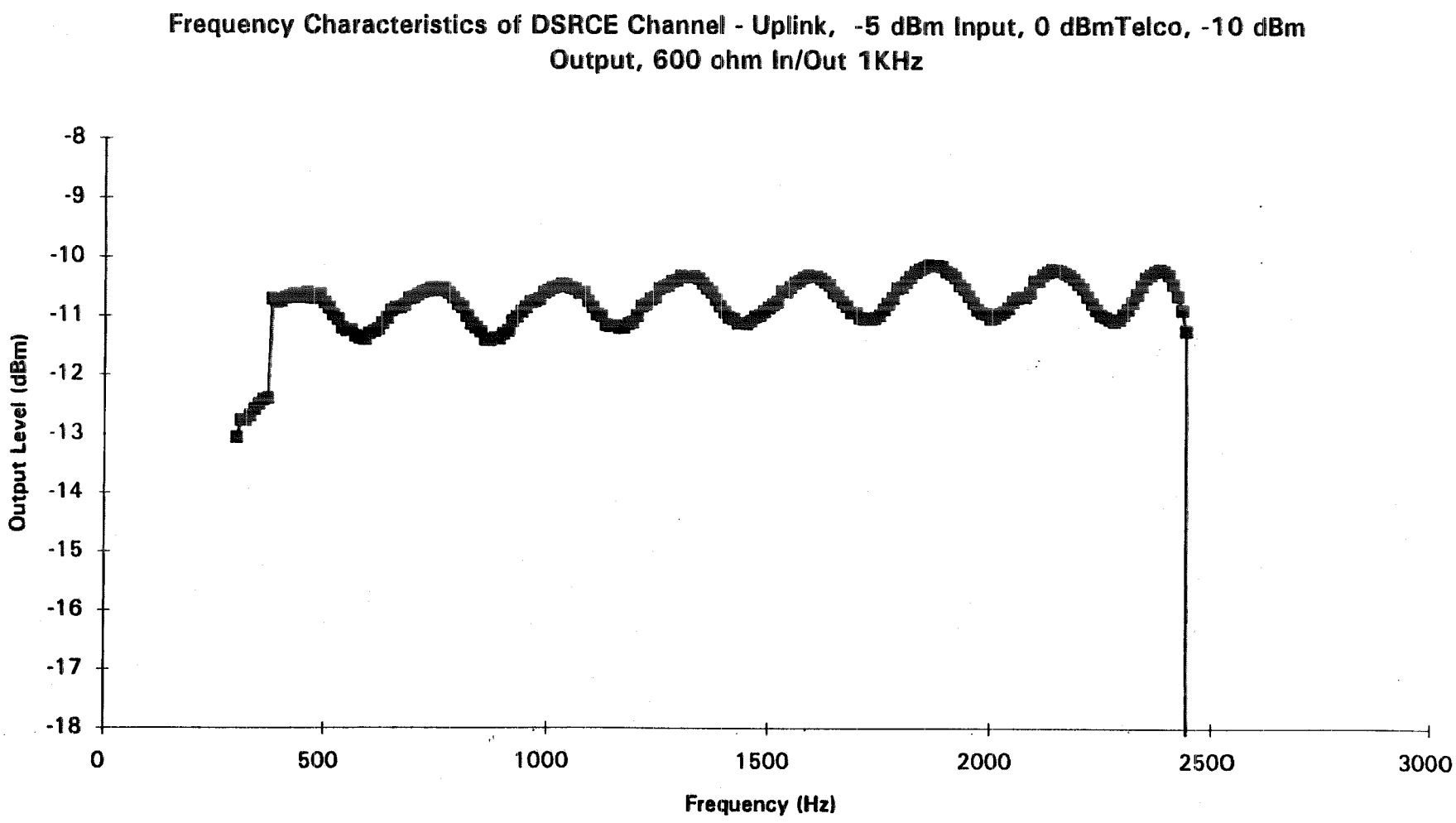

Figure 5-3 End-to-End F ency Characteristics (-5 dBm)

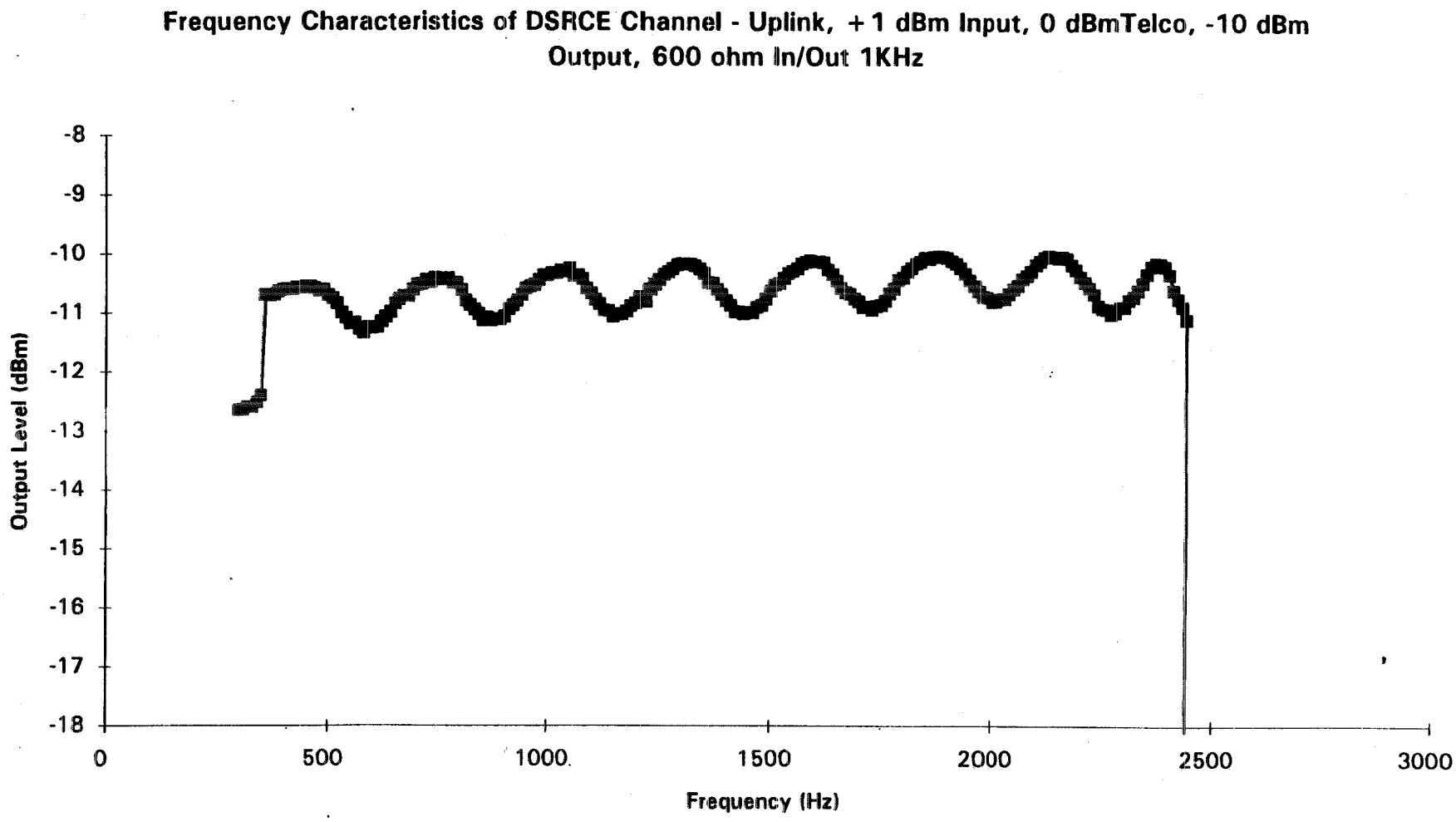

Figure 5-2 End-to-End Frequency Characteristics (+1 dBm)

5.7.2 Summary Descriptions

5.7.2.1 Small Tower Voice Switch (STVS)

A system level functional test was performed. Testing consisted of patching the STVS in place of the ICSS while performing VS01 testing. There were no anomalies/problems observed during the test.

5.7.2.2 Rapid Deployment Voice Switch (RDVS)

The results of RDVS testing follow: the RCE equipment exhibited no anomalies during testing at audio gain settings of 0 dBm transmit/0 dBm receive and -5 dBm transmit/-17 dBm receive.

5.7.2.3 End-to-End Frequency Characterization of an RCE Channel (Uplink)

This characterization was conducted in response to PTR-021 in which the RCE channel (Uplink) failed to meet a **shall**$_{112}$ requirement, in that the voice data being provided to the radio transmitter in the uplink direction has to maintain a level of -10 dBm ± 0.5 dB. The data showed that the output varied for the three different input levels from 300 to 3000 Hz as shown in the following table and Figures 5-2, 5-3, and 5-4:

Input Level	Output Levels
1 dBm	1. -12.65 dBm (at 300 Hz) and -11.12 dBm (at 2440 Hz) 2. Minimum value of -12.65 dBm (at 300 Hz) 3. Maximum value of -10.10 dBm (at 1860 Hz) 4. Cutoff occurring around 2450 Hz
-5 dBm	1. -13.07 dBm (at 300 Hz) and -11.26 dBm (at 2440 Hz) 2. Minimum value of -13.07 dBm (at 300 Hz) 3. Maximum value of -10.14 dBm (at 1860 Hz) 4. Cutoff occurring around 2450 Hz
-11 dBm	1. -12.54 dBm (at 300 Hz) and -11.53 dBm (at 2450 Hz) 2. Minimum value of -12.54 dBm (at 300 Hz) 3. Maximum value of -10.02 dBm (at 1870 Hz) 4. Cutoff occurring around 2460 Hz.

5.7.2.4 Frequency Characterization of the RCE Modem

This characterization was conducted in response to the inability of the RCE channel to establish data modem lock during LINCS VG6 testing. The frequency plot showed the center frequency to be 2970 ± 30 Hz. The bandwidth of the data was from 2680 to 3570 Hz. This exceeded the 3004 Hz upper frequency limit for a LINCS VG6 Telco line. This was

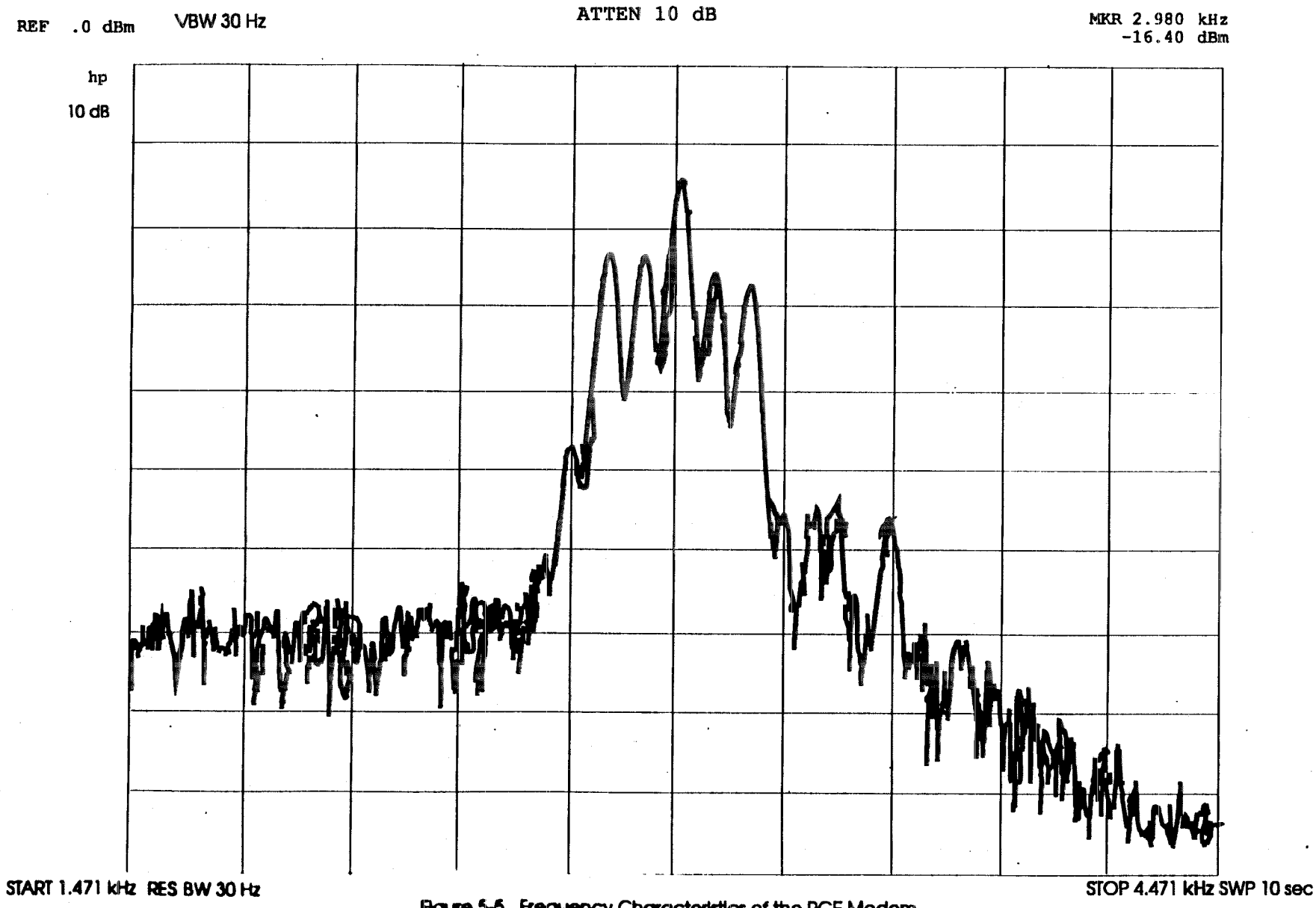

Figure 5-5 Frequency Characteristics of the RCE Modem

documented in PTR-052. Refer to Figure 5-5 for a plot of the RCE modem frequency characterization.

5.7.2.5 MDT Compatibility

First and Second OT&E Efforts - The following are the results of MDT Compatibility testing:

1. The configuration files delivered with the MDT were incompatible with the version of the MDT initially delivered for OT&E testing. This was documented in PTR-001. It was determined that the configuration files were from a previous version of the MDT. CSTI delivered the correct configuration files rectifying the problem and closing the PTR.

2. The MDT power measurements were off by as much as 0.6 dBm. This was documented in PTR-013. CSTI indicated the accuracy of the power measurements to be ± 1 dB. CSTI was tasked to investigate and report back on the capability of the RCE to tighten the tolerances.

3. The original delivered product did not provide a copy of the PROM software for OT&E verification. This was documented in PTR-022. A copy of the PROM software was latter acquired and verified for uploading.

4. Initial operation of the MDT revealed that the HOT BACKUP selection would not stay asserted without the AUTO SWITCH set. This was documented in PTR-026. CSTI indicated that this was normal and subsequently provided a fix in a later release of the MDT software to tie the two selections together. CSTI also provided adequate documentation to the change.

5. Replacement MDT software (Diskette Serial Number 7008275, Version 1.0, Revision B) was missing the embedded serial number. This was documented in PTR-031 All of the updated MDT software (Version 1.0, Revision C) received was correctly serialized

6. The SET and GET functions of the Operating Mode window function differently for Dual Control mode than they do for Primary Backup mode. This was documented in PTR-033.

7. Received several COM2 communications errors when starting up the MDT. The only way to initiate COM2 communications was to restart the MDT. This was documented in PTR-034. CSTI has indicated that executing the MDT under Windows, via a DOS window, will occasionally cause a COM2 status error.

8. The MDT error log file provides continuous storage of the MDT errors. The error log did not contain the "Timeout querying slot 1" error message that was received in the MDT status screen. This was documented in PTR-037.

9. Information presented during informal factory training described the ability to upload PROM software to the R-DVC remotely via the C-DVC. The MDT was unable to upload the PROM software as described above. This was documented in PTR-047.

Third Effort OT&E - The following PTRs were generated as a result of MDT Compatibility testing:

1. The SET and GET functions of the Operating Mode window function differently for Dual Control mode than they do for Primary Backup mode. This was previously documented in PTR-033 during the First and Second OT&E efforts.

2. The MDT does not provide the functionality of assigning the two new Contact Closure outputs (COUT6 & COUT7) as described in System Problem Report (SPR) 1148. This was documented in PTR-060.

3. Implementation of SPR 1159 to prevent an operator connected to the R-DVC from "setting/retrieving opmode and I/O maps", also prevents a technician from determining the opmode and I/O map settings. Incorporating SPR 1159 will require two technicians to setup/repair a channel that requires a new Remote unit. This was documented in PTR-061.

4. The SPR 1149 does not provide for separate Dual Control DVC configurations for the Config All option (i.e. Control 1 = Type B, Control 2 = Type C, etc.). This was documented in PTR-062.

5.7.2.6 CMT Compatibility

First and Second OT&E Efforts - The following PTRs were generated as a result of CMT Compatibility testing:

1. Received an " 'C:\RCE3\DBI.MDB' is corrupted or isn't a Microsoft Access database" error message when loading CMT. After responding to the cue, the CMT program terminated with no further directions. The RCE test team was unable to determine corrective action based on CMS User's Guide. A phone conference with CSTI resulted in using REPAIR.EXE program to fix the database. It should be noted that the CMT File Menu provides a dark lit Repair Database Option. This was documented in PTR-039.

2. The CMT Revision C no longer provided for FIRMWARE UPLOAD. The CMT Revisions A and B Network Outline provided an icon to "Hi-light a card and click to open the Firmware Upload window." This option was no longer available in the CMT Revision C Version 1.0 Software. This was documented in PTR-040.

3. The "Hardware, Comm Servers..." and "Ports and Cards..." Submenu options of the CMT Hardware menu were not available even though the user has Access and Get Rights selected in the User Accounts Operation Profile. This was documented in PTR-041.

4. The CMT Front Panel Maintenance screen was too big for display in 1024x768 display mode. The display must be scrolled up and down to perform functions of the front panel display. This was documented in PTR-042. CSTI provided a change to the system resource size parameter via phone. This rectified the problem and closed the PTR.

5. The CMS User's Guide did not provide guidance in setting up and installing multiple Digiboards and/or associated CMT servers. When installing a second Digiboard, the CSS's C:\WINNT35\COMMSRVR.INI file needed to be updated to reflect additional communication (comm) ports. The variable MAXCOMMS needed to be increased to reflect the additional ports (eg. 18(2+16) + 16 = 34). This information was obtained via phone conference with CSTI. This was documented in PTR-043.

6. When installing four Digiboards, the CSS's C:\WINNT35\COMMSRVR.INI file was updated to reflect additional comm ports. The variable MAXCOMMS was increased to reflect the additional ports (eg. 18(2+16) + 16 +16 + 16 = 66). Two Status Messages ("Unable to locate device from Control Address 105.001.066.002" and "Unable to locate device from Control Address 105.001.066.007") kept appearing on the CMT when the CMS was configured as described above. Also the Hardware, Card Assignment menu only provided up to Logical Port: 64. Setting the CSS's INI file MAXCOMMS to 64 stopped the erroneous Status Messages. This was documented in PTR-044.

Third OT&E Effort - The following PTRs were generated as a result of CMT Compatibility testing:

1. Login to the CMT can be accomplished without a password, this may lead to security problems. This was previously documented in PTR-035.

2. The SPR 1166 identifies the need for the CMT to allow double entries of individual I/O map addresses. The CMT Revision D, Version 1.0 permits double entries, however the process is not the same for all the I/O maps. This was documented in PTR-054.

3. The archive function provides the operator with the capability to archive the database. When the archive function is initiated, there is no on-screen indication that archiving is occurring. This was documented in PTR-055.

4. The SPR 1155 removed the DC Power Levels from the AGC screen. This removed the ability to get any power levels, including audio from the ABC screen. Recommend adding GET function to the ABC screen. This was documented in PTR-056.

5. The PTR-47/SPR 1137 addressed the issue of a user with full rights not having the ability to GET/SET "ALL" of the CMT functions. Changes incorporated in ECN 1349 corrected problems addressed by PTR-047, however the user lost access to areas that he previously had rights to. For example, the Card Summary Screen does not allow the user to Erase the Error Control Block or change the Name of the Card. This was documented in PTR-057.

7.0 RECOMMENDATIONS

After analyzing the results of the tests, we recommend that the RCE be deployed. This decision is based on the premise that follow up testing and/or investigation will be conducted to address the listed issues. We recommend the following solutions to the issues stated in the Executive Summary.

7.1 System Analysis

An end-to-end system analysis of the complete audio path from the controller to the radio and vice-versa needs to be performed. Results will be presented in a follow up report. The following identifies several areas in the audio path that need further investigation:

1. Microphone - This should include an analysis of the various microphones and headsets utilized by controllers. This would consist of determining the output level of the microphone for a standard sound level input, the dynamic range of the microphone with varying input sound levels (i.e. the maximum and minimum output levels), and examining the alignment methodology for the associated microphone.

2. Regulated Output Amplifier (ROA)/Line Amplifier (LA) - This should include an analysis similar to the microphone analysis. This should also include an analysis of the audio compression characteristics and the associated effects on the dynamic range of the audio signal. This analysis should also provide data on the effects of the average audio levels as a result of the audio compression.

3. RCE - This should include determining the maximum input and output audio levels to/from the RCE at both the VSCE and radio interfaces. The analysis should also include the dynamic range of the RCE compared to the prescribed (blue pages) alignment procedures.

4. Telco - An analysis of the audio level submitted to the Telco lines needs to be addressed. A question that needs to be answered is the FAA alignment levels versus the 0 dBm maximum (instantaneous) and the -13 dBm maximum (averaged over a three second period) audio levels prescribed by the FCC. Preliminary data suggests the FAA is routinely exceeding these levels.

5. Transmitters - The actual audio levels into the transmitters need to be examined. The following issues need to be addressed: Is there is any over-modulation occurring because of maximum instantaneous levels being applied? Is any additional audio compression occurring due to the internal AGC circuitry of the transmitter?

6. Receivers - This analysis should identify an alignment procedure for the receivers that would ensure the output of the receiver does not exceed 0 dBm into the RCE and determine what the average audio would be at that level. Initial studies indicate that with the receiver aligned at 0 dBm, the output level can be as high as +7.5 dBm when the instantaneous RF modulation of the incoming signal is at 90 percent.

DSRCE PROGRAM TECHNICAL REPORT STATUS

PTR NO.	ORIGINATOR	DATE	S/W VER	DESCRIPTION	STATUS	RESOLUTION
1	R. LEHMAN	12/5/94	B 1.0	DEFAULT FILES	CLOSED	NEW SOFTWARE DELIVERY
2	R. FESNAK	12/6/94	B 1.0	INTERCONNECT CABLES	CLOSED	NEW MOUNTING CONNECTOR
3	R. FESNAK	12/6/94	B 1.0	PROTECTIVE COVERS	CLOSED	REOPENED 4/4/95. COVERS NOT ADEQUATELY SECURED.
4	R. FESNAK	12/7/94	B 1.0	M/S TIMING	CLOSED	CORRECTED TEST METHODOLOGY
5	R. FESNAK	12/7/94	B 1.0	NO SIGNAL RECEIVED	CLOSED	
6	R. FESNAK	12/7/94	B 1.0	LOST 24 VOLTS (SHORT CIRCUIT PROTECTION)	CLOSED	REOPENED 4/4/95. NEW PART (ULN2803A) WILL BE ADDED
7	R. FESNAK	12/7/94	B 1.0	LOCK CONDITION	CLOSED	WAS NOT DUPLICATED IN OT&E TESTING
8	R. FESNAK	12/8/94	B 1.0	MUTE FRONT PANEL CONTROL	CLOSED	NOT A REQUIREMENT
9	R. FESNAK	12/8/94	B 1.0	MUTE FRONT PANEL INDICATION	CLOSED	WILL NOT BE IMPLEMENTED
10	R. FESNAK	12/8/94	B 1.0	COMPLETE AUDIO PATH	CLOSED	TESTED AND VERIFIED
11	R. FESNAK	12/9/94	B 1.0	ERASE PARAMETER BLOCK	CLOSED	TESTED AND VERIFIED
12	R. FESNAK	12/9/94	B 1.0	POWER ON TOGGLES	CLOSED	SEE PTR-006
13	R. FESNAK	12/12/94	B 1.0	UHF AUDIO POWER READING	CLOSED	NOT A REQUIREMENT - COST IMPACT
14	S. DAVIS	12/12/94	B 1.0	REPLACEMENT UNIT QUALITY CONTROL	CLOSED	STILL A CONCERN
15	R. FESNAK	12/15/94	B 1.0	MAIN/STANDBY TOGGLES	CLOSED	TESTED AND VERIFIED
16	R. FESNAK	12/15/94	B 1.0	VOICE QUALITY	CLOSED	ACCEPTED DURING SHAKEDOWN TESTING
17	R. FESNAK	12/16/94	B 1.0	JACK INTERFACE CARD	CLOSED	FLUSH MOUNT JACKS
18	R. FESNAK	12/16/94	B 1.0	LEVEL ADJUSTMENT LOSES LOCK	CLOSED	TESTED AND VERIFIED
19	R. MORTON	12/16/94	B 1.0	LATCH TAB MECHANISM	CLOSED	REFERENCE PTR-002
20	E. NEIDERMAN	12/19/94	B 1.0	LINCS TELCO PATH DOES NOT MAINTAIN LOCK	CLOSED	REMOVED CROSS PATCH. (TESTED AND VERIFIED)
21	R. FESNAK	12/22/94	B 1.0	300 HZ RESPONSE	CLOSED	NOT A REQUIREMENT
22	E. NEIDERMAN	12/21/94	B 1.0	UPLOAD CAPABILITY	CLOSED	TESTED AND VERIFIED
23	R. LEHMAN	1/3/95	B 1.0	MISMATCH LOCK INDICATION ON CV-DVC AND R-DVC	CLOSED	NOT A REQUIREMENT
24	R. LEHMAN	1/3/95	B 1.0	INACCURATE REPORTING OF TRUNK STATUS	CLOSED	TESTED AND VERIFIED
25	R. LEHMAN	1/3/95	B 1.0	DVC FRONT PANEL ASSERTION INDICATIONS	CLOSED	TESTED AND VERIFIED
26	R. LEHMAN	1/3/95	B 1.0	NON-ASSERTION OF HOT BACKUP SELECTION	CLOSED	TESTED AND VERIFIED
27	R. LEHMAN	1/3/95	B 1.0	INTERMITTENT LOCK VIA BANTOM JACKS	CLOSED	WAS NOT DUPLICATED DURING SHAKEDOWN TESTING
28	H. BILICKI	1/4/95	B 1.0	FAILED POWER REQUIREMENTS	OPEN	NEW P/S WITH FAN ASSEMBLY (STILL WAITING FOR MEMO)
29	R. FESNAK	1/13/95	B 1.0	LEVEL MEASUREMENT EXCEEDS MAX VALUE	CLOSED	TESTED AND VERIFIED
30	R. FESNAK	1/13/95	B 1.0	LEVEL MEASUREMENT NOT MEETING MIN VALUES	CLOSED	TESTED AND VERIFIED
31	R. LEHMAN	1/26/95	B 1.0	INVALID S/N IN MDT. EXE SERIAL NUMBER	CLOSED	TESTED AND VERIFIED
32	R. FESNAK	3/10/95	C 1.0	SEPARATE TX/RX MUTE CONFIRM MALFUNCTION	CLOSED	WILL BE INCORPORATED IN REV "D"
33	R. FESNAK	3/10/95	C 1.0	MDT DUAL CONTROL DOCUMENTATION	OPEN	DOCUMENTATION PROBLEM
34	R. FESNAK	3/10/95	C 1.0	MDT COM2 CONFIGURATION PROBLEM	CLOSED	CLOSED - IN MDT USER'S MANUAL (STILL INVESTIGATE)
35	R. FESNAK	3/10/95	C 1.0	CMT LOGIN SECURITY PROBLEM	OPEN	WILL BE INCORPORATED IN REV "D"
36	R. FESNAK	3/10/95	C 1.0	CMT DUAL CONTROL PROBLEM	CLOSED	BAD CABLE ASSEMBLY
37	R. FESNAK	3/13/95	C 1.0	MDT ERROR LOG PROBLEM	CLOSED	REV "D" WILL REPORT ALL TIMEOUTS
38	R. FESNAK	3/17/95	C 1.0	SCO2 REGAIN OF TELCO/CONTROL	CLOSED	CORRECTED TEST METHODOLOGY
39	R. LEHMAN	3/22/95	C 1.0	CORRUPTED DATABASE WHEN LOADING CMT	CLOSED	STILL NEEDS TO BE INVESTIGATED
40	R. LEHMAN	3/22/95	C 1.0	CMT REV C NO LONGER PROVIDES FIRMWARE UPLOAD	OPEN	POSSIBLE PHASE 6 ADDITION
41	R. LEHMAN	3/22/95	C 1.0	CMT SUBMENU OPTIONS NOT AVAILABLE	CLOSED	WILL BE INCORPORATED IN REV "D"
42	R. LEHMAN	3/22/95	C 1.0	CMT FRONT PANEL MAINTENANCE SCREEN	CLOSED	RECONFIGURED SYSTEM RESOURCE SIZE TO SMALL
43	R. LEHMAN	3/22/95	C 1.0	INSTALLATION OF MULTIPLE DIGIBOARDS	OPEN	DOCUMENTATION - CMT WILL BE UPDATED
44	R. LEHMAN	3/22/95	C 1.0	MAXIMUM COMM PORTS	CLOSED	MAY BE INCORPORATED IN REV "D"
45	R. LEHMAN	3/22/95	C 1.0	HOT KEY ASSIGNMENTS	OPEN	MAY BE INCORPORATED IN REV "D"
46	R. LEHMAN	3/22/95	C 1.0	AUDIO GAIN SETTINGS	OPEN	DOCUMENTATION UPDATES IN THE SYSTEM MANUAL
47	R. LEHMAN	3/22/95	C 1.0	UPLOAD PROM SOFTWARE	CLOSED	WILL BE INCORPORATED IN REV "D"
48	R. MORTON	4/5/95	C 1.0	TAPE USED TO SECURE THE 96 PIN CONNECTOR NOT ADEQUATE	CLOSED	NEW TAPE IS ADEQUATE
49	T. GUCCIARDI	5/1/95	C 1.0	MDT USERS GUIDE CHANGE PAGES DUPLICATION	CLOSED	INCORPORATED INTO PTR-069
50	T. GUCCIARDI	5/1/95	C 1.0	RCE SYSTEMS MANUAL CHANGE PAGES DUPLICATION	CLOSED	INCORPORATED INTO PTR-069
51	R. MORTON	5/5/95	C 1.0	CSTI ENGINEERING CHANGE NOTICE PACKAGE COMMENTS	CLOSED	INCORPORATED INTO PTR-069
52	R. FESNAK	5/25/95	C 1.0	BANDWIDTH VOICE/DATA EXCEEDS THE 3004HZ UPPER LIMIT	OPEN	
53	S. DAVIS	6/7/95	C 1.0	CRITIQUE OF CSTI DVC AND DCE TECHNICAL MANUALS	CLOSED	INCORPORATED INTO PTR-069
54	R. LEHMAN	9/12/95	D 1.0	CMT - MULTIPLE I/O MAP ADDRESSING	OPEN	
55	R. LEHMAN	9/12/95	D 1.0	CMT - DATABASE ARCHIVING CONFIRMATION	OPEN	
56	R. LEHMAN	9/12/95	D 1.0	CMT - OBTAINING AUDIO POWER LEVELS VIA THE AGC SCREEN	OPEN	
57	R. LEHMAN	9/12/95	D 1.0	CMT - OPERATOR LIMITED ACCESS RIGHTS	OPEN	
58	R. LEHMAN	9/12/95	D 1.0	CMT - LOADOVERVIEW ERROR WITHOUT DEFINED NETWORKS	OPEN	
59	R. LEHMAN	9/12/95	D 1.0	CMT - OVERWRITTING EXISTING DATABASE VIA THE GET FUNCTION	OPEN	
60	R. LEHMAN	9/14/95	D 1.0	MDT - VOX CONFIGURATION PROBLEM	OPEN	
61	R. LEHMAN	9/15/95	D 1.0	MDT - REMOTE MONITORING/CONFIGURATION OF RCE CHANNEL	OPEN	
62	R. LEHMAN	9/15/95	D 1.0	MDT - SEPARATE CONFIGURATION FOR DUAL CONTROL	OPEN	
63	R. LEHMAN	9/22/95	D 1.0	MDT - CDV AND NODE 3 RDV TRUNK3 PARAMETERS DO NOT MATCH	OPEN	
64	R. LEHMAN	9/22/95	D 1.0	DVC CONTROL/REMOTE +1.5 GAIN TO AUDIO PATH	OPEN	
65	R. FESNAK	10/6/95	D 1.0	MUTE TIMING	OPEN	
66	R. FESNAK	11/8/95	D 1.0	RELIABILITY AND MAINTAINABILITY	CLOSED	RECEIVED DOCUMENTATION ON 11/8/95
67	R. FESNAK	11/8/95	D 1.0	EMI CHARACTERIZATION	OPEN	
68	R. FESNAK	11/8/95	D 1.0	VOX FUNCTION/FIRMWARE	OPEN	
69	R. FESNAK	11/22/95	C 1.0	TBS REVIEW/COMMENTS	OPEN	

6.0 Program Technical Report (PTR) List

The PTRs generated during the OT&E efforts are summarized in the following table: Complete copies of the PTRs are contained in Appendix C. The original PTRs and attachments are kept at the FAA Technical Center RCE Test Laboratory.

6. Selecting System Overview with no networks defined resulted in a "LoadOverview Error. 3021 - No Current record" message. This was documented in PTR-058.

7. The GET function of the CMT I/O Mapping overwrites the CMT database. This prevents the user from retrieving the existing DVC configuration without overwriting the existing database. This function differs from the MDT GET function. This was documented in PTR-059.

5.7.2.7 RCE/BUEC Interface EMI

Test results showed no indications of EMI interference. The Remote RCE did not have any effect on the receiver's sensitivity within both the VHF or UHF frequency ranges when configured with Motorola CM-200 TX/RX within a NEMA box.

5.7.2.8 Non-Linear Gain of RCE Audio Path

The 1.4 dBm gain, encountered at SCT, was duplicated when the test tone level was approximately 1.2 dBm. Once the 1.4 dBm gain occurs, the difference between expected and actual output remains 1.4 dBm as audio output is increased. When the audio output is decreased the 1.4 dbm gain remained until the audio level was reduced to approximately -10 dBm.

The non-linear gain was present in both the transmit and receive directions. If both receivers (F1 and F2) simultaneously receive audio at the same levels described above, the output of the Remote RCE would be 4.5 dBm. If the audio is removed from one path (< -10 dBm) the output remains 3.0 dBm higher. Only when the audio is removed from both paths, does the audio gain return to normal. Also, when an RCE unit transitions, the level goes to 12 dBm for 14 msec before settling down to 1.4 dBm.

There are several caveats to the alignment process presently being used which need to be addressed. A standardized process for the alignment of the complete system needs to be identified. The results of the analysis should identify potential problems with the present methodology and provide alternative solutions.

7.2 LINCS

The LINCS VG6 line at the FAA Technical Center connecting building 176 with PHL (cross patched) was not operational with the CSTI RCE equipment, however it worked with existing tone control equipment. Additional testing determined the problems encountered at the FAA Technical Center were a result of this particular LINCS installation (cross patched in PHL). The FAA Technical Center's LINCS VG6 lines met the VG6 requirements for Envelope Delay. However, it is believed that Envelope Delay was the reason the RCE was not operating. Further testing with a Remote RCE at building 176 and a Control RCE at PHL (not cross patched) was successful. The FAA Technical Center recommends that Envelope Delay Distortion testing be performed over the frequency range 300 to 3000 Hz for all LINCS installations

7.3 Voice Quality

The test results did not meet the required score of 91.0 ± 0.7. The ATC personnel at the Jacksonville ARTCC (ZJX) evaluated voice quality and found it acceptable with a 3% degradation from existing equipment. Since ATC personnel are the end users for this system, they should have the final say on the voice quality.

7.4 Power Requirements

The power supply failed Inrush Current testing for 240 VAC. If the RCE is to be utilized in a facility with a 240 VAC circuit, a determination will have to be made whether this requirement applies.

7.5 EMI

The RCE failed two tests for EMI. Requirement was only to provide EMI characterization data for RCE. Since a new power supply was added to the RCE and numerous hardware changes were incorporated, it will have to be recharacterized. This was documented in PTR-067. No EMI related problems were identified during Shakedown testing or at any other sites where the RCE has been installed.

7.6 CMT

The CMT product is not mature and has the following outstanding PTRs against the software:

1. PTR-035 - Login Security Problem
2. PTR-040 - Rev. C No Longer Provides Firmware Upload
3. PTR-045 - Hot Key Assignments
4. PTR-054 - Multiple I/O Map Addressing
5. PTR-055 - Database Archiving
6. PTR-056 - Obtaining Audio Power Levels Via the AGC Screen
7. PTR-057 - Operator Limited Access Rights
8. PTR-058 - Loadoverview Error Without Defined Networks
9. PTR-059 - Overwriting Existing Database Via the Get Function

The RCE could be deployed with the outstanding PTRs against the CMT. However, once the final version of the software is released, follow up testing will need to be performed to verify that the PTRs are resolved. Additionally, the CMT will have to be reverified with the integration of the Planned Product Improvement (PPI) incorporating the MPS and BUEC functions.

7.7 MDT

The MDT has the following outstanding PTRs against the software:

1. PTR-060 - VOX Configuration Problem, I/O Mapping
2. PTR-061 - Remote/Monitoring of RCE Channel
3. PTR-062 - Separate Configuration for Dual Control
4. PTR-063 - C-DVC and Node 3 R-DVC Trunk 3 Parameter Mismatch

Once the final version of the software is released, follow up testing will need to be performed to verify that the PTRs are resolved.

7.8 Configuration

Recommend not be deploying the RCE in the Dual Control configuration until operational scenarios have been defined and tested. This situation occurs when two Control RCEs operate a single channel with one Remote RCE over two separate four wire transmission paths. The RCE channel therefore consists of two Control units and one Remote unit. No Shakedown testing was conducted in a Dual Configuration. ATC personnel need to define operational scenarios, specifically with ICSS and VSCS, and then comprehensive testing should be done.

The Separate Transmitter/Receiver configuration and the Main/Standby ATR functions were tested at OT&E. However, they were not operationally tested during Shakedown at ZJX.

7.9 Documentation

The CMT, MDT, RCE System Manual, DVC, and Dual Channel Enclosure (DCE) documentation were updated with changes from OT&E and Shakedown testing. The updated documentation (Revision 2.0) was reviewed by the OT&E test team for technical accuracy and completeness. The following PTRs remain open.

1. PTR-033 - MDT Dual Control Documentation
2. PTR-043 - Installation of Multiple Digiboards
3. PTR-069 - Technical Instruction Books (TIBS) Review/Comments

The documentation will need to be reviewed to verify that the PTRs are closed.

7.10 Mute Timing

The Production RCE units tested during the Third OT&E effort did not meet the Mute timing requirements. This anomaly does not appear to adversely affect the functionality of the equipment and has been undetected by field personnel to date. Recommend further investigation of this anomaly by CSTI, since prior versions of the RCE complied with the Mute timing requirements. This was documented in PTR-065.

7.11 RCE Modem Data

The bandwidth of the RCE Modem exceeds the LINCS VG6 bandwidth upper limit of 3004 Hz. This was documented in PTR-052.

7.12 VOX Firmware

The DVC does not implement the new Planned Product Improvement (PPI) of the VOX functions incorporated in the RIM card. This is documented in PTR-068.

7.13 Non-Linear Gain of RCE Audio Path

A 1.4 dBm gain, encountered at Southern Cal TRACON (SCT), was duplicated in the RCE Laboratory when the test tone level was approximately 1.2 dBm. Refer to Section 5.7.2.8 for a complete description of the anomaly. This anomaly is documented in PTR-064. CSTI has stated that the next release of the DVC firmware will solve this problem. Recommend further investigation of this phenomenon.

7.14 Software and Hardware Modifications

There were several modifications made to the RCE that were not acceptable by the FAA Technical Center OT&E effort. It is essential that these modifications be tested in a follow up OT&E effort. The magnitude of the changes may involve several software and hardware changes.

7.14.1 ZJX Software Modifications

Software modifications to prevent access at the Remote RCE from erasing the Control RCE's configuration block have resulted in the loss of Remote RCE I/O Map viewing capability. This was documented in PTR-061. Follow up testing is necessary to verify this proposed change is implemented properly.

7.14.2 OT&E Software Modifications

The following is a summary of the proposed software modifications as a result of OT&E testing at the FAA Technical Center:

1. The CMT Security (PTR-035) is not adequate. The CMT can be logged onto without the use of a password. Documentation needs to be updated to specify that an unlogged user can only view, not change parameters. However, unlogged user can still change device names.

2. The PPI incorporating VOX functionality into the DVC firmware will need to be verified.

7.14.3 Hardware Changes

The following hardware change will require follow up OT&E testing:

1. VOX Circuitry - The Program Management Office, via a PPI , had CSTI incorporate two (2) additional relays on the RIM card. One of the relays will provide the VOX signaling/indications required to more fully emulate typical Type C equipment. The remaining relay will be a spare for future use.

ZLA Los Angeles, CA ARTCC

9.0 ACRONYM LIST

AC	Alternating Current
A/G	Air to Ground
ACF	Area Control Facilities
AF	Airways Facilities
AF	Audio Frequency
AFSS	Automated Flight Service Stations
AF	Audio Frequency
AGC	Auto Gain Control
AM	Amplitude Modulated
AN/GRR	ITT Ground Remote Receiver
AN/GRT	ITT Ground Remote Transmitter
APMO	Assistant Program Manager Office
APMT	Assistant Program Manage for Test
ARTCC	Air Route Traffic Control Centers
ATC	Air Traffic Control
ATCT	Air Traffic Control Towers
ATR	Antenna Transfer Relay
AWG	American Wire Gauge
BUEC	Back Up Emergency Communications
C-DVC	Control Data Voice Card
CMS	Centralized Maintenance System
CMT	Central Maintenance Terminal
COI	Critical Operation Issues
COTR	Contracting Officers Technical Representative
CSS	Communications Server
CSTI	Communication Systems Technology, INC
DAM	Diagnostic Acceptability Measure
DAT	Digital Audio Tape
dB	DeciBel
dBm	DeciBel (in reference to 1 milliwatt)
dBrnC	DeciBels (above the Relative Noise C-weighted channel)
dBu	DeciBels (in reference to 1 microvolt)
DC	Direct Current
DCE	Dual Channel Enclosure
DMM	Digital Multimeter
DRT	Diagnostic Rhyme Test
RCE	Radio Control Equipment
DVC	Data Voice Card
ECN	Engineering Change Notice
EMC	Electromagnetic Compatibility
EMI	Electromagnetic Interference
ERCE	Ernie's Radio Control Equipment
FAA	Federal Aviation Administration

8.0 OTHER NOTES

The functions listed below were provided by CSTI to enhance the capabilities of the RCE. These items were not tested during this OT&E effort since they were not functions required during the Operational Capability Testing (OCT) phase and/or specified in FAA-E-2885.

1. The Automatic Gain Control (AGC) feature of the RCE channel was not tested during the OT&E efforts.

2. The VOX feature, which is part of the Type C configuration, was not tested since the software functionality has not been added to the Control RCE.

3. The Receiver Auto Mute option which automatically mutes any audio signal below the RCE's Audio VOX threshold was not tested during the OT&E efforts.

4. The VOX Attack and Decay functions were not verified during the OT&E efforts.

5. The squelch break feature provided by CST and required by the 19 essential RCE requirements (reference DSRCE System Level Requirements memorandum, dated March 10, 1994) may be implemented in the future. However, the current radios do not support this feature.

The following MDT and CMT functions were not tested:

1. Modem Features and Baud Rates selections were not tested.

2. The DVC Serial Port Configuration selections were not verified.

3. The C-DVC Remote Control (MDT/CMT Control Override) and Front Panel Control Override Maintenance Menu selections were not tested.

4. The C-DVC I/O Mapping for Lockout, Squelch Break, and AGC were not tested.

5. The R-DVC I/O Mapping for Main/Standby PTT Confirms, Main/Standby Squelch Break, and Main/Standby AGC were not tested.

Recommend that these features be tested in follow up testing.